# DC6VS

FIT

*UP TO 17.2 SEER2*
*1½ TO 5 TONS*

## DAIKIN *FIT* *HIGH-EFFICIENCY, COMMUNICATING, VARIABLE-SPEED, R-32 INVERTER DRIVE SIDE DISCHARGE SPLIT SYSTEM AIR CONDITIONER*

### *Contents*


Nomenclature....2
Product Specifications....3
Expanded Cooling Data....4
Performance Data
Standard Mode / Boost Mode....27
Sound Data
Sound Power....31
Sound Pressure....32
Quite Mode....33
AHRI Ratings (see note)....34
Wiring Diagram....35
Dimensions....38
Accessories....40

R32

### *Standard Features*

- Daikin variable-speed swing compressors
- Quiet digitally commutated fan motor
- High-density compressor sound blanket
- Compatible with Daikin *One+* smart thermostat and other Daikin communicating equipment
- Daikin control algorithmic logic
- In communicating mode, only two low-voltage wires to outdoor unit required
- Diagnostic indicator lights, seven-segment LED display, and fault code storage
- Daikin Inside intelligence for diagnostics
- Quiet-mode - provides enhanced acoustical comfort, up to 3 different sound levels (as low as 45dBA)
- Field-selectable boost mode increases compressor speed during unusually high loads
- Field-installed bi-flow filter drier
- Coil and ambient temperature sensors
- Suction pressure transducer
- Sweat connection service valves with easy access to gauge ports
- AHRI Certified; ETL Listed

### *Cabinet Features*

- Heavy-gauge galvanized steel cabinet with grille-style sound control side design
- Custom Ivory white powder-paint finish
- High corrosion-resistant (ZAM®), unpainted steel bottom frame and legs
- 500-hour salt-spray tested
- Wire fan discharge grille
- Top and side maintenance access
- When properly anchored, meets the 2023 Florida Building Code unit integrity requirements for hurricane-type winds (Anchor bracket kits available.)

* Complete warranty available from your local dealer or at www.daikincomfort.com. To receive the 12-Year Unit Replacement Limited Warranty and 12-Year Parts Limited Warranty, online registration must be completed within 60 days of installation. Online registration is not required in California, Florida, or Québec. The duration of warranty coverages in Texas and Florida differs in some cases. Other limitations and exclusions apply, refer to complete warranty details for full list of limitations and exclusions. Additional requirements for annual maintenance are required for the 12-Year Unit Replacement Limited Warranty. Changes in law, regulations, or technology may result in an equivalent unit not being available. Other limitations and exclusions apply, refer to complete warranty details for full list of limitations and exclusions, as well as rights and obligations should an equivalent unit not be available.

| D | C | 6 | V | S | S | 36 | 1 | 0 * | A | A * |
|---|---|---|---|---|---|---|---|---|---|---|
| 1 | 2 | 3 | 4 | 5 | 6 | 7,8 | 9 | 10 | 11 | 12 |

**Brand**

D Daikin

**Type**

C - Condenser R-32
H - Heat Pump R-32

**SEER**

| | |
|---|---|
| 3 – 13.4-13.7 | 7 – 17.0 - 17.9 |
| 4 – 13.8-14.5 | 8 – 17.6 - 18.5 |
| 5 – 14.6-15.5 | 9 – 18.0 - 18.9 |
| 6 – 16.0 - 16.9 | 0 – 19.0+ |

**Compressor**

V - Variable Speed

**Feature Set**

S - Side Discharge Communicating

**Minor Revision**

A: Initial Release
B: 1st Revision

**Major Revision**

A: Initial Release
B: 1st Revision

**Variation**

**Electrical**

1 – 208-230 V, 1 Phase, 60 Hz

**Tonnage Nominal**

| | |
|---|---|
| 18 - 1½ tons | 36 - 3 Tons |
| 24 - 2 tons | 42- 3½ Tons |
| 30 - 2½ tons | 48 - 4 Tons |
| 36 - 3 tons | |

**Sales Region**

S - Southeast & North
A - All Region

| | DC6VSS 1810A* | DC6VSS 2410A* | DC6VSS 3010A* | DC6VSS 3610A* | DC6VSS 4210A* | DC6VSS 4810A* | DC6VS 6010A* |
|---|---|---|---|---|---|---|---|
| **Capacities (AHRI Rated)** | | | | | | | |
| Max. Cooling (BTU/h) | 17,100 | 23,200 | 28,400 | 34,200 | 41,000 | 45,500 | 53,500 |
| **Ambient Operation Range** Cooling (°FDB(°CDB)) | 0 to 115 (-17.8 to 46.1) | | | | | | |
| **Compressor** | | | | | | | |
| Type | Swing | Swing | Swing | Swing | Swing | Swing | Swing |
| **Condenser Fan Motor** | | | | | | | |
| Horsepower | 0.09 | 0.09 | 0.20 | 0.20 | 0.36 | 0.36 | 0.36 |
| **Refrigeration System** | | | | | | | |
| Refrigerant Line Size[1] | | | | | | | |
| Liquid Line Size (“O.D.) | ⅜" | ⅜" | ⅜" | ⅜" | ⅜" | ⅜" | ⅜" |
| Suction Line Size (“O.D.) | ¾" | ¾" | ⅞" | ⅞" | 1⅛" | 1⅛" | 1⅛" |
| Refrigerant Connection Size | | | | | | | |
| Liquid Valve Size (“O.D.) | ⅜" | ⅜" | ⅜" | ⅜" | ⅜" | ⅜" | ⅜" |
| Suction Valve Size (“O.D.) | ¾" | ¾" | ⅞" | ⅞" | ⅞" | ⅞" | ⅞" |
| Valve Connection Type | Front Sealing | Front Sealing | Front Sealing | Front Sealing | Front and Back Sealing | Front and Back Sealing | Front and Back Sealing |
| Refrigerant Charge (oz.) | 74 | 74 | 76 | 83 | 100 | 100 | 118 |
| Expansion Device | EEV | EEV | EEV | EEV | EEV | EEV | EEV |
| Superheat at Service Valve | Auto-control | Auto-control | Auto-control | Auto-control | Auto-control | Auto-control | Auto-control |
| Subcooling at Service Valve | 10±1°F | 12±1°F | 14±1°F | 15±1°F | 8±1°F | 9±1°F | 9±1°F |
| **Electrical Data** | | | | | | | |
| Voltage / Phase (60 Hz) | 208-230/1 | 208-230/1 | 208-230/1 | 208-230/1 | 208-230/1 | 208-230/1 | 208-230/1 |
| Fan/Compressor Inverter Drive Input | 8.1 | 13.3 | 17.6 | 17.6 | 25.4 | 25.4 | 30 |
| Minimum Circuit Ampacity[2] | 12.8 | 16.8 | 22.4 | 22.4 | 31.8 | 31.8 | 37.5 |
| Max. Overcurrent Protection[3] | 15 | 20 | 25 | 25 | 35 | 35 | 40 |
| Min / Max Volts | 197/253 | 197/253 | 197/253 | 197/253 | 197/253 | 197/253 | 197/253 |
| Electrical Conduit Size | ½" | ½" | ½" | ½" | ½" or ¾" | ½" or ¾" | ½" or ¾" |
| **Equipment Weight (lbs)** | 119 | 119 | 129 | 133 | 163 | 163 | 174 |
| **Ship Weight (lbs)** | 133 | 133 | 143 | 148 | 183 | 183 | 196 |

[1] Tested and rated in accordance with ANSI/AHRI Standard 210/240

[2] Wire size should be determined in accordance with National Electrical Codes; extensive wire runs will require larger wire sizes

[3] Must use time-delay fuses or HACR-type circuit breakers of the same size as noted.

**Notes**

- Always check the S&R plate for electrical data on the unit being installed.
- Installer will need to supply ⅞” to 1⅛” adapters for suction line connections.
- Unit is charged with refrigerant for 15’ of ⅜” liquid line. System charge must be adjusted per Installation Instructions Final Charge Procedure.

(See table below for allowable line set diameter)

| Unit Tons | Allowable Line Set Diameter | | | | | | |
|---|---|---|---|---|---|---|---|
| | Liquid | | | Suction | | | |
| | ¼ | 5/16 | ⅜ | ⅝ | ¾ | ⅞ | 1⅛ |
| 1.5 | x | x | x | x* | x | | |
| 2.0 | | x | x | x* | x | | |
| 2.5 | | x | x | | x* | x | |
| 3.0 | | x | x | | x* | x | |
| 3.5 | | | x | | | x | x |
| 4.0 | | | x | | | x | x |
| 5.0 | | | x | | | x | x |

x Allowable combination

* For marked combinations, if normal ambient operation temperature is less than 14°F, limit line set length to 50 ft. max.

| Outdoor Unit | DC6VS*361*A* | |
|---|---|---|
| Indoor Unit | D*96TC0403B/0603B<br>D*97MC0603B<br>D*80TC0603B/0803B<br>MBVK12BP<br>D*96SC0603BU | Trim more than 10% settings are invalid. Trimmed up CFM makes miss matching error. |

| Outdoor Unit | DC6VS*601*A* | |
|---|---|---|
| Indoor Unit | D*96TC0804C<br>D*97MC0804C<br>D*80TC0804C | Trim more than 5% settings are invalid. Trimmed up CFM makes miss matching error. |

| | DC6VSA 181WA* | DC6VSA 241WA* | DC6VSA 301WA* | DC6VSA 361WA* |
|---|---|---|---|---|
| **Capacities (AHRI Rated)** | | | | |
| Max. Cooling (BTU/h) | 17,100 | 23,200 | 28,400 | 33,000 |
| **Ambient Operation Range** Cooling (°FDB(°CDB)) | 0 to 115 (-17.8 to 46.1) | | | |
| **Compressor** | | | | |
| Type | Swing | Swing | Swing | Swing |
| **Condenser Fan Motor** | | | | |
| Horsepower | 0.09 | 0.09 | 0.20 | 0.20 |
| **Refrigeration System** | | | | |
| Refrigerant Line Size[1] | | | | |
| Liquid Line Size (“O.D.) | ⅜" | ⅜" | ⅜" | ⅜" |
| Suction Line Size (“O.D.) | ¾" | ¾" | ⅞" | ⅞" |
| Refrigerant Connection Size | | | | |
| Liquid Valve Size (“O.D.) | ⅜" | ⅜" | ⅜" | ⅜" |
| Suction Valve Size (“O.D.) | ¾" | ¾" | ⅞" | ⅞" |
| Valve Connection Type | Front Sealing | Front Sealing | Front Sealing | Front Sealing |
| Refrigerant Charge (oz.) | 74 | 74 | 76 | 83 |
| Expansion Device | EEV | EEV | EEV | EEV |
| Superheat at Service Valve | Auto-control | Auto-control | Auto-control | Auto-control |
| Subcooling at Service Valve | 10±1°F | 12±1°F | 14±1°F | 13±1°F |
| **Electrical Data** | | | | |
| Voltage / Phase (60 Hz) | 208-230/1 | 208-230/1 | 208-230/1 | 208-230/1 |
| Fan/Compressor Inverter Drive Input | 8.1 | 13.3 | 17.6 | 17.6 |
| Minimum Circuit Ampacity[2] | 12.8 | 16.8 | 22.4 | 22.4 |
| Max. Overcurrent Protection[3] | 15 | 20 | 25 | 25 |
| Min / Max Volts | 197/253 | 197/253 | 197/253 | 197/253 |
| Electrical Conduit Size | ½" | ½" | ½" | ½" |
| **Equipment Weight (lbs)** | 119 | 119 | 129 | 133 |
| **Ship Weight (lbs)** | 133 | 133 | 143 | 148 |

[1] Tested and rated in accordance with ANSI/AHRI Standard 210/240

[2] Wire size should be determined in accordance with National Electrical Codes; extensive wire runs will require larger wire sizes

[3] Must use time-delay fuses or HACR-type circuit breakers of the same size as noted.

**Notes**

- Always check the S&R plate for electrical data on the unit being installed.
- Installer will need to supply ⅞” to 1⅛” adapters for suction line connections.
- Unit is charged with refrigerant for 15’ of ⅜” liquid line. System charge must be adjusted per Installation Instructions Final Charge Procedure.

# Expanded Cooling Data — DC6VSS1810A*/DFVE24BP1300A*

| | | | Outdoor Ambient Temperature | | | | | | | | | | | | | | | | | | | | | | | |
|---|---|---|---|---|---|---|---|---|---|---|---|---|---|---|---|---|---|---|---|---|---|---|---|---|---|---|
| | | | 65°F | | | | 75°F | | | | 85°F | | | | 95°F | | | | 105°F | | | | 115°F | | | |
| | | | Entering Indoor Wet Bulb Temperature | | | | | | | | | | | | | | | | | | | | | | | |
| IDB | Airflow | | 59 | 63 | 67 | 71 | 59 | 63 | 67 | 71 | 59 | 63 | 67 | 71 | 59 | 63 | 67 | 71 | 59 | 63 | 67 | 71 | 59 | 63 | 67 | 71 |
| 70 | 520 | MBh | 15.9 | 16.6 | 17.6 | | 16.7 | 16.9 | 17.4 | | 16.3 | 16.5 | 17.0 | | 15.5 | 15.7 | 16.2 | | 14.6 | 14.8 | 15.3 | | 13.7 | 14.0 | 14.5 | |
| | | S/T | 0.62 | 0.54 | 0.40 | | 0.62 | 0.54 | 0.40 | | 0.65 | 0.57 | 0.43 | | 1.00 | 0.59 | 0.45 | | 1.00 | 0.61 | 0.47 | | 1.00 | 0.67 | 0.52 | |
| | | ΔT | 21 | 19 | 13 | | 18 | 16 | 13 | | 18 | 16 | 13 | | 18 | 16 | 13 | | 18 | 16 | 13 | | 19 | 17 | 14 | |
| | | kW | 1.04 | 1.07 | 1.07 | | 1.20 | 1.20 | 1.20 | | 1.36 | 1.35 | 1.35 | | 1.52 | 1.52 | 1.51 | | 1.70 | 1.70 | 1.70 | | 1.91 | 1.91 | 1.91 | |
| | | Amps | 3.6 | 3.8 | 3.9 | | 4.5 | 4.5 | 4.4 | | 5.1 | 5.1 | 5.1 | | 5.8 | 5.8 | 5.8 | | 6.6 | 6.6 | 6.6 | | 7.5 | 7.5 | 7.5 | |
| | | Hi PR | 243 | 245 | 245 | | 280 | 281 | 283 | | 320 | 321 | 323 | | 363 | 364 | 366 | | 410 | 411 | 412 | | 459 | 460 | 462 | |
| | | Lo PR | 125 | 126 | 131 | | 133 | 135 | 138 | | 140 | 142 | 145 | | 146 | 147 | 151 | | 151 | 153 | 156 | | 158 | 160 | 163 | |
| | 610 | MBh | 16.6 | 17.3 | 17.9 | | 17.0 | 17.2 | 17.7 | | 16.5 | 16.8 | 17.3 | | 15.8 | 16.0 | 16.5 | | 14.8 | 15.1 | 15.6 | | 14.0 | 14.2 | 14.7 | |
| | | S/T | 0.69 | 0.61 | 0.47 | | 0.70 | 0.62 | 0.48 | | 0.73 | 0.65 | 0.51 | | 1.00 | 0.67 | 0.53 | | 1.00 | 0.69 | 0.55 | | 1.00 | 0.74 | 0.60 | |
| | | ΔT | 19 | 15 | 12 | | 17 | 15 | 12 | | 17 | 15 | 12 | | 17 | 15 | 12 | | 16 | 15 | 12 | | 17 | 16 | 13 | |
| | | kW | 1.08 | 1.08 | 1.07 | | 1.21 | 1.21 | 1.21 | | 1.36 | 1.36 | 1.36 | | 1.53 | 1.53 | 1.52 | | 1.71 | 1.71 | 1.70 | | 1.92 | 1.92 | 1.92 | |
| | | Amps | 3.8 | 3.9 | 3.9 | | 4.5 | 4.5 | 4.5 | | 5.2 | 5.1 | 5.1 | | 5.9 | 5.9 | 5.8 | | 6.6 | 6.6 | 6.6 | | 7.6 | 7.6 | 7.6 | |
| | | Hi PR | 246 | 245 | 247 | | 282 | 283 | 285 | | 322 | 324 | 325 | | 366 | 367 | 368 | | 412 | 413 | 415 | | 462 | 463 | 464 | |
| | | Lo PR | 127 | 130 | 133 | | 136 | 137 | 140 | | 142 | 144 | 147 | | 148 | 150 | 153 | | 154 | 155 | 158 | | 161 | 162 | 165 | |
| | 700 | MBh | 17.4 | 17.7 | 18.2 | | 17.3 | 17.5 | 18.0 | | 16.8 | 17.1 | 17.6 | | 16.1 | 16.3 | 16.8 | | 15.2 | 15.4 | 15.9 | | 14.3 | 14.5 | 15.0 | |
| | | S/T | 0.73 | 0.65 | 0.51 | | 0.74 | 0.66 | 0.52 | | 1.00 | 0.69 | 0.54 | | 1.00 | 0.71 | 0.56 | | 1.00 | 0.73 | 0.59 | | 1.00 | 1.00 | 0.64 | |
| | | ΔT | 16 | 14 | 11 | | 16 | 14 | 11 | | 16 | 14 | 11 | | 16 | 14 | 11 | | 15 | 14 | 11 | | 16 | 15 | 12 | |
| | | kW | 1.09 | 1.08 | 1.08 | | 1.22 | 1.22 | 1.22 | | 1.37 | 1.37 | 1.37 | | 1.53 | 1.53 | 1.53 | | 1.72 | 1.71 | 1.71 | | 1.93 | 1.93 | 1.93 | |
| | | Amps | 3.9 | 3.9 | 3.9 | | 4.5 | 4.5 | 4.5 | | 5.2 | 5.2 | 5.2 | | 5.9 | 5.9 | 5.9 | | 6.7 | 6.7 | 6.7 | | 7.6 | 7.6 | 7.6 | |
| | | Lo PR | 247 | 248 | 249 | | 285 | 286 | 288 | | 325 | 326 | 328 | | 368 | 369 | 371 | | 414 | 415 | 417 | | 464 | 465 | 467 | |
| | | Lo PR | 130 | 132 | 135 | | 138 | 140 | 143 | | 145 | 146 | 150 | | 151 | 152 | 155 | | 156 | 158 | 161 | | 163 | 165 | 168 | |
| 75 | 520 | MBh | 17.8 | 18.6 | 19.1 | 20.0 | 17.8 | 18.1 | 18.6 | 19.4 | 17.0 | 17.2 | 17.8 | 18.6 | 15.9 | 16.1 | 16.6 | 17.4 | 14.6 | 14.8 | 15.3 | 16.1 | 13.4 | 13.7 | 14.2 | 14.9 |
| | | S/T | 0.76 | 0.64 | 0.51 | 0.37 | 0.72 | 0.65 | 0.51 | 0.37 | 0.75 | 0.67 | 0.54 | 0.39 | 1.00 | 0.69 | 0.55 | 0.41 | 1.00 | 0.70 | 0.57 | 0.43 | 0.99 | 0.75 | 0.62 | 0.48 |
| | | ΔT | 26 | 22 | 18 | 15 | 23 | 21 | 18 | 14 | 23 | 21 | 18 | 14 | 22 | 20 | 17 | 14 | 21 | 19 | 16 | 13 | 22 | 20 | 17 | 14 |
| | | kW | 0.85 | 0.93 | 0.93 | 0.93 | 1.07 | 1.07 | 1.07 | 1.08 | 1.24 | 1.24 | 1.24 | 1.25 | 1.43 | 1.43 | 1.42 | 1.43 | 1.64 | 1.64 | 1.64 | 1.65 | 1.89 | 1.89 | 1.89 | 1.90 |
| | | Amps | 3.6 | 3.9 | 3.9 | 3.9 | 4.4 | 4.4 | 4.4 | 4.4 | 4.9 | 4.9 | 4.9 | 5.0 | 5.6 | 5.6 | 5.6 | 5.7 | 6.5 | 6.5 | 6.5 | 6.5 | 7.7 | 7.7 | 7.7 | 7.7 |
| | | Hi PR | 234 | 237 | 238 | 243 | 277 | 278 | 280 | 284 | 321 | 322 | 324 | 328 | 369 | 370 | 372 | 376 | 422 | 423 | 424 | 429 | 479 | 480 | 482 | 486 |
| | | Lo PR | 121 | 122 | 129 | 141 | 125 | 128 | 135 | 147 | 130 | 133 | 141 | 153 | 134 | 137 | 145 | 157 | 137 | 141 | 148 | 161 | 142 | 146 | 154 | 166 |
| | 610 | MBh | 18.6 | 18.9 | 19.4 | 20.3 | 18.1 | 18.3 | 18.9 | 19.7 | 17.3 | 17.5 | 18.0 | 18.8 | 16.1 | **16.4** | 16.9 | 17.7 | 14.9 | 15.1 | 15.6 | 16.4 | 13.7 | 13.9 | 14.4 | 15.2 |
| | | S/T | 0.80 | 0.72 | 0.58 | 0.44 | 0.80 | 0.72 | 0.59 | 0.45 | 0.82 | 0.75 | 0.61 | 0.47 | 1.00 | **0.76** | 0.63 | 0.49 | 1.00 | 0.78 | 0.65 | 0.50 | 0.99 | 0.83 | 0.69 | 0.55 |
| | | ΔT | 22 | 20 | 17 | 14 | 22 | 20 | 17 | 13 | 21 | 20 | 16 | 13 | 21 | **19** | 16 | 13 | 20 | 18 | 15 | 12 | 20 | 19 | 16 | 13 |
| | | kW | 0.94 | 0.93 | 0.93 | 0.94 | 1.08 | 1.08 | 1.08 | 1.09 | 1.25 | 1.25 | 1.25 | 1.26 | 1.44 | **1.43** | 1.43 | 1.44 | 1.65 | 1.65 | 1.65 | 1.66 | 1.90 | 1.90 | 1.90 | 1.91 |
| | | Amps | 3.9 | 3.9 | 3.9 | 3.9 | 4.4 | 4.4 | 4.4 | 4.4 | 5.0 | 5.0 | 5.0 | 5.0 | 5.7 | **5.7** | 5.7 | 5.7 | 6.6 | 6.5 | 6.5 | 6.6 | 7.7 | 7.7 | 7.7 | 7.8 |
| | | Hi PR | 238 | 239 | 241 | 245 | 279 | 280 | 282 | 286 | 323 | 324 | 326 | 330 | 371 | **372** | 374 | 379 | 424 | 425 | 427 | 431 | 482 | 483 | 484 | 489 |
| | | Lo PR | 121 | 124 | 131 | 143 | 127 | 130 | 138 | 150 | 132 | 135 | 143 | 155 | 136 | **139** | 147 | 159 | 139 | 143 | 151 | 163 | 144 | 148 | 156 | 168 |
| | 700 | MBh | 19.0 | 19.2 | 19.8 | 20.6 | 18.4 | 18.7 | 19.2 | 20.0 | 17.6 | 17.8 | 18.4 | 19.2 | 16.5 | 16.7 | 17.2 | 18.0 | 15.2 | 15.4 | 15.9 | 16.7 | 14.0 | 14.3 | 14.8 | 15.5 |
| | | S/T | 0.83 | 0.76 | 0.62 | 0.48 | 0.84 | 0.76 | 0.63 | 0.48 | 1.01 | 0.78 | 0.65 | 0.51 | 1.00 | 0.80 | 0.66 | 0.52 | 1.00 | 0.82 | 0.68 | 0.54 | 0.99 | 0.86 | 0.73 | 0.59 |
| | | ΔT | 21 | 19 | 16 | 12 | 20 | 19 | 15 | 12 | 20 | 19 | 15 | 12 | 20 | 18 | 15 | 12 | 19 | 17 | 14 | 11 | 19 | 18 | 15 | 12 |
| | | kW | 0.94 | 0.94 | 0.94 | 0.95 | 1.09 | 1.09 | 1.09 | 1.09 | 1.26 | 1.25 | 1.25 | 1.26 | 1.44 | 1.44 | 1.44 | 1.45 | 1.66 | 1.65 | 1.65 | 1.66 | 1.91 | 1.91 | 1.90 | 1.91 |
| | | Amps | 3.9 | 3.9 | 3.9 | 4.0 | 4.4 | 4.4 | 4.4 | 4.4 | 5.0 | 5.0 | 5.0 | 5.0 | 5.7 | 5.7 | 5.7 | 5.7 | 6.6 | 6.6 | 6.6 | 6.6 | 7.8 | 7.8 | 7.8 | 7.8 |
| | | Hi PR | 241 | 242 | 243 | 247 | 282 | 283 | 284 | 289 | 326 | 327 | 328 | 333 | 374 | 375 | 377 | 381 | 427 | 428 | 430 | 434 | 484 | 485 | 487 | 491 |
| | | Lo PR | 123 | 127 | 134 | 146 | 129 | 133 | 140 | 152 | 134 | 138 | 145 | 157 | 138 | 142 | 149 | 161 | 142 | 145 | 153 | 165 | 147 | 150 | 158 | 171 |

IDB = Entering Indoor Dry Bulb Temperature

Shaded area is ACCA (TVA) conditions

kW = Total system power

High and low pressures are measured at the liquid and suction service valves.

Amps = outdoor unit amps (comp.+fan)

Airflow may vary depending on actual ambient conditions and system operation modes.

| | | | Outdoor Ambient Temperature | | | | | | | | | | | | | | | | | | | | | | | |
|---|---|---|---|---|---|---|---|---|---|---|---|---|---|---|---|---|---|---|---|---|---|---|---|---|---|---|
| | | | 65°F | | | | 75°F | | | | 85°F | | | | 95°F | | | | 105°F | | | | 115°F | | | |
| | | | Entering Indoor Wet Bulb Temperature | | | | | | | | | | | | | | | | | | | | | | | |
| IDB | Airflow | | 59 | 63 | 67 | 71 | 59 | 63 | 67 | 71 | 59 | 63 | 67 | 71 | 59 | 63 | 67 | 71 | 59 | 63 | 67 | 71 | 59 | 63 | 67 | 71 |
| 80 | 520 | MBh | 18.4 | 18.7 | 19.2 | 20.1 | 17.9 | 18.2 | 18.7 | 19.5 | 17.1 | 17.3 | 17.9 | 18.7 | 15.9 | 16.2 | 16.7 | 17.5 | 14.7 | 14.9 | 15.4 | 16.2 | 13.5 | 13.8 | 14.3 | 15.0 |
| | | S/T | 0.85 | 0.77 | 0.63 | 0.49 | 1.01 | 0.77 | 0.64 | 0.50 | 1.01 | 0.79 | 0.66 | 0.52 | 1.00 | 0.81 | 0.68 | 0.53 | 1.00 | 0.83 | 0.69 | 0.55 | 0.99 | 0.99 | 0.74 | 0.60 |
| | | ΔT | 27 | 26 | 22 | 19 | 27 | 25 | 22 | 18 | 26 | 25 | 21 | 18 | 25 | 24 | 21 | 17 | 25 | 23 | 20 | 17 | 25 | 23 | 21 | 17 |
| | | kW | 0.93 | 0.93 | 0.93 | 0.93 | 1.07 | 1.07 | 1.07 | 1.08 | 1.24 | 1.24 | 1.24 | 1.25 | 1.43 | 1.43 | 1.43 | 1.43 | 1.64 | 1.64 | 1.64 | 1.65 | 1.89 | 1.89 | 1.89 | 1.90 |
| | | Amps | 3.9 | 3.9 | 3.9 | 3.9 | 4.4 | 4.4 | 4.4 | 4.4 | 5.0 | 4.9 | 4.9 | 5.0 | 5.6 | 5.6 | 5.6 | 5.7 | 6.5 | 6.5 | 6.5 | 6.5 | 7.7 | 7.7 | 7.7 | 7.7 |
| | | Hi PR | 236 | 237 | 239 | 243 | 277 | 278 | 280 | 284 | 321 | 322 | 324 | 328 | 369 | 370 | 372 | 376 | 422 | 423 | 425 | 429 | 479 | 480 | 482 | 487 |
| | | Lo PR | 119 | 123 | 130 | 141 | 125 | 129 | 136 | 148 | 130 | 134 | 141 | 153 | 134 | 138 | 145 | 157 | 138 | 141 | 149 | 161 | 143 | 146 | 154 | 166 |
| | 610 | MBh | 18.7 | 19.0 | 19.5 | 20.4 | 18.2 | 18.4 | 19.0 | 19.8 | 17.3 | 17.6 | 18.1 | 18.9 | 16.2 | 16.5 | **17.1** | 17.8 | 14.9 | 15.2 | 15.7 | 16.5 | 13.8 | 14.0 | 14.5 | 15.3 |
| | | S/T | 0.92 | 0.85 | 0.71 | 0.57 | 1.01 | 0.85 | 0.71 | 0.57 | 1.01 | 0.87 | 0.73 | 0.59 | 1.00 | 0.88 | **0.75** | 0.61 | 1.00 | 0.90 | 0.77 | 0.63 | 0.99 | 0.99 | 0.82 | 0.68 |
| | | ΔT | 26 | 24 | 21 | 17 | 25 | 24 | 20 | 17 | 25 | 23 | 20 | 17 | 24 | 23 | **20** | 16 | 23 | 22 | 19 | 16 | 24 | 22 | 19 | 16 |
| | | kW | 0.94 | 0.94 | 0.93 | 0.94 | 1.08 | 1.08 | 1.08 | 1.09 | 1.25 | 1.25 | 1.25 | 1.26 | 1.44 | 1.44 | **1.43** | 1.44 | 1.65 | 1.65 | 1.65 | 1.66 | 1.90 | 1.90 | 1.90 | 1.91 |
| | | Amps | 3.9 | 3.9 | 3.9 | 4.0 | 4.4 | 4.4 | 4.4 | 4.4 | 5.0 | 5.0 | 5.0 | 5.0 | 5.7 | 5.7 | **5.7** | 5.7 | 6.6 | 6.5 | 6.5 | 6.6 | 7.7 | 7.7 | 7.7 | 7.8 |
| | | Hi PR | 239 | 240 | 241 | 245 | 280 | 281 | 282 | 287 | 324 | 325 | 326 | 331 | 372 | 373 | **375** | 379 | 425 | 426 | 428 | 432 | 482 | 483 | 485 | 489 |
| | | Lo PR | 121 | 125 | 132 | 144 | 127 | 131 | 138 | 150 | 132 | 136 | 143 | 155 | 136 | 140 | **150** | 160 | 140 | 144 | 151 | 163 | 145 | 148 | 156 | 169 |
| | 700 | MBh | 19.1 | 19.3 | 19.9 | 20.7 | 18.5 | 18.8 | 19.3 | 20.1 | 17.7 | 17.9 | 18.5 | 19.3 | 16.5 | 16.8 | 17.3 | 18.1 | 15.3 | 15.5 | 16.0 | 16.8 | 14.1 | 14.3 | 14.8 | 15.6 |
| | | S/T | 1.01 | 0.88 | 0.75 | 0.61 | 1.01 | 0.89 | 0.75 | 0.61 | 1.01 | 0.91 | 0.77 | 0.63 | 1.00 | 0.92 | 0.79 | 0.65 | 1.00 | 1.00 | 0.81 | 0.67 | 0.99 | 0.99 | 0.85 | 0.71 |
| | | ΔT | 25 | 23 | 20 | 16 | 24 | 23 | 19 | 16 | 24 | 22 | 19 | 16 | 23 | 22 | 18 | 15 | 22 | 21 | 18 | 15 | 23 | 21 | 18 | 15 |
| | | kW | 0.94 | 0.94 | 0.94 | 0.95 | 1.09 | 1.09 | 1.09 | 1.10 | 1.26 | 1.26 | 1.25 | 1.26 | 1.44 | 1.44 | 1.44 | 1.45 | 1.66 | 1.65 | 1.65 | 1.66 | 1.91 | 1.91 | 1.91 | 1.92 |
| | | Amps | 4.0 | 3.9 | 3.9 | 4.0 | 4.4 | 4.4 | 4.4 | 4.4 | 5.0 | 5.0 | 5.0 | 5.0 | 5.7 | 5.7 | 5.7 | 5.7 | 6.6 | 6.6 | 6.6 | 6.6 | 7.8 | 7.8 | 7.8 | 7.8 |
| | | Hi PR | 241 | 242 | 244 | 248 | 282 | 283 | 285 | 289 | 326 | 327 | 329 | 333 | 374 | 375 | 377 | 381 | 427 | 428 | 430 | 434 | 484 | 486 | 487 | 492 |
| | | Lo PR | 124 | 127 | 134 | 146 | 130 | 133 | 141 | 153 | 135 | 138 | 146 | 158 | 139 | 142 | 150 | 162 | 142 | 146 | 153 | 166 | 147 | 151 | 158 | 171 |
| 85 | 520 | MBh | 18.7 | 19.0 | 19.5 | 20.4 | 18.2 | 18.5 | 19.0 | 19.8 | 17.4 | 17.6 | 18.1 | 19.0 | 16.2 | 16.5 | 17.0 | 17.8 | 15.0 | 15.2 | 15.7 | 16.5 | 13.8 | 14.0 | 14.5 | 15.3 |
| | | S/T | 1.01 | 0.87 | 0.74 | 0.59 | 1.01 | 0.87 | 0.74 | 0.60 | 1.01 | 1.01 | 0.76 | 0.62 | 1.00 | 1.00 | 0.78 | 0.63 | 1.00 | 1.00 | 0.79 | 0.65 | 0.99 | 0.99 | 0.84 | 0.70 |
| | | ΔT | 31 | 29 | 26 | 22 | 30 | 28 | 25 | 22 | 30 | 28 | 25 | 21 | 29 | 27 | 24 | 21 | 28 | 26 | 23 | 20 | 28 | 27 | 24 | 21 |
| | | kW | 0.93 | 0.93 | 0.93 | 0.94 | 1.08 | 1.08 | 1.07 | 1.08 | 1.24 | 1.24 | 1.24 | 1.25 | 1.43 | 1.43 | 1.43 | 1.44 | 1.64 | 1.64 | 1.64 | 1.65 | 1.90 | 1.89 | 1.89 | 1.90 |
| | | Amps | 3.9 | 3.9 | 3.9 | 3.9 | 4.4 | 4.4 | 4.4 | 4.4 | 5.0 | 5.0 | 4.9 | 5.0 | 5.6 | 5.6 | 5.6 | 5.7 | 6.5 | 6.5 | 6.5 | 6.6 | 7.7 | 7.7 | 7.7 | 7.7 |
| | | Hi PR | 237 | 238 | 240 | 244 | 278 | 279 | 281 | 285 | 322 | 323 | 325 | 329 | 371 | 372 | 373 | 378 | 423 | 424 | 426 | 430 | 481 | 482 | 483 | 488 |
| | | Lo PR | 121 | 125 | 132 | 143 | 127 | 131 | 138 | 150 | 132 | 136 | 143 | 155 | 136 | 140 | 147 | 159 | 140 | 143 | 151 | 163 | 144 | 148 | 156 | 168 |
| | 610 | MBh | 19.0 | 19.3 | 19.8 | 20.7 | 18.5 | 18.7 | 19.3 | 20.1 | 17.6 | 17.9 | 18.4 | 19.2 | 16.5 | 16.7 | 17.3 | 18.1 | 15.2 | 15.5 | 16.0 | 16.7 | 14.1 | 14.3 | 14.8 | 15.5 |
| | | S/T | 1.01 | 0.95 | 0.81 | 0.67 | 1.01 | 0.95 | 0.81 | 0.67 | 1.01 | 1.01 | 0.84 | 0.69 | 1.00 | 1.00 | 0.85 | 0.71 | 1.00 | 1.00 | 0.87 | 0.73 | 0.99 | 0.99 | 0.92 | 0.78 |
| | | ΔT | 29 | 28 | 24 | 21 | 29 | 27 | 24 | 20 | 28 | 27 | 23 | 20 | 27 | 26 | 23 | 20 | 27 | 25 | 22 | 19 | 27 | 25 | 22 | 19 |
| | | kW | 0.94 | 0.94 | 0.94 | 0.94 | 1.08 | 1.08 | 1.08 | 1.09 | 1.25 | 1.25 | 1.25 | 1.26 | 1.44 | 1.44 | 1.44 | 1.45 | 1.65 | 1.65 | 1.65 | 1.66 | 1.90 | 1.90 | 1.90 | 1.91 |
| | | Amps | 3.9 | 3.9 | 3.9 | 4.0 | 4.4 | 4.4 | 4.4 | 4.4 | 5.0 | 5.0 | 5.0 | 5.0 | 5.7 | 5.7 | 5.7 | 5.7 | 6.6 | 6.6 | 6.5 | 6.6 | 7.8 | 7.8 | 7.7 | 7.8 |
| | | Hi PR | 240 | 241 | 242 | 247 | 281 | 282 | 284 | 288 | 325 | 326 | 328 | 332 | 373 | 374 | 376 | 380 | 426 | 427 | 429 | 433 | 483 | 484 | 486 | 490 |
| | | Lo PR | 123 | 127 | 134 | 146 | 129 | 133 | 140 | 152 | 134 | 138 | 145 | 157 | 138 | 142 | 149 | 161 | 142 | 145 | 153 | 165 | 146 | 150 | 158 | 171 |
| | 700 | MBh | 19.4 | 19.6 | 20.2 | 21.0 | 18.8 | 19.1 | 19.6 | 20.4 | 18.0 | 18.2 | 18.8 | 19.6 | 16.8 | 17.1 | 17.6 | 18.4 | 15.6 | 15.8 | 16.3 | 17.1 | 14.4 | 14.6 | 15.1 | 15.9 |
| | | S/T | 1.01 | 0.99 | 0.85 | 0.71 | 1.01 | 0.99 | 0.85 | 0.71 | 1.01 | 1.01 | 0.87 | 0.73 | 1.00 | 1.00 | 0.89 | 0.75 | 1.00 | 1.00 | 0.91 | 0.77 | 0.99 | 0.99 | 0.99 | 0.81 |
| | | ΔT | 28 | 27 | 23 | 20 | 28 | 26 | 23 | 19 | 27 | 26 | 22 | 19 | 26 | 25 | 22 | 19 | 26 | 24 | 21 | 18 | 26 | 24 | 21 | 18 |
| | | kW | 0.94 | 0.94 | 0.94 | 0.95 | 1.09 | 1.09 | 1.09 | 1.10 | 1.26 | 1.26 | 1.26 | 1.27 | 1.45 | 1.44 | 1.44 | 1.45 | 1.66 | 1.66 | 1.66 | 1.66 | 1.91 | 1.91 | 1.91 | 1.92 |
| | | Amps | 4.0 | 4.0 | 3.9 | 4.0 | 4.4 | 4.4 | 4.4 | 4.5 | 5.0 | 5.0 | 5.0 | 5.0 | 5.7 | 5.7 | 5.7 | 5.7 | 6.6 | 6.6 | 6.6 | 6.6 | 7.8 | 7.8 | 7.8 | 7.8 |
| | | Hi PR | 242 | 243 | 245 | 249 | 283 | 284 | 286 | 290 | 327 | 328 | 330 | 334 | 375 | 377 | 378 | 383 | 428 | 429 | 431 | 435 | 486 | 487 | 489 | 493 |
| | | Lo PR | 126 | 129 | 136 | 148 | 132 | 135 | 142 | 155 | 136 | 140 | 148 | 160 | 140 | 144 | 152 | 164 | 144 | 148 | 155 | 168 | 149 | 152 | 160 | 173 |

IDB = Entering Indoor Dry Bulb Temperature

Shaded area is AHRI conditions

kW = Total system power

High and low pressures are measured at the liquid and suction service valves.

Amps = outdoor unit amps (comp.+fan)

Airflow may vary depending on actual ambient conditions and system operation modes.

# Expanded Cooling Data — DC6VSS2410A* / DFVE24BP1300A*

| | | | Outdoor Ambient Temperature | | | | | | | | | | | | | | | | | | | | | | | |
|---|---|---|---|---|---|---|---|---|---|---|---|---|---|---|---|---|---|---|---|---|---|---|---|---|---|---|
| | | | 65°F | | | | 75°F | | | | 85°F | | | | 95°F | | | | 105°F | | | | 115°F | | | |
| | | | Entering Indoor Wet Bulb Temperature | | | | | | | | | | | | | | | | | | | | | | | |
| IDB | Airflow | | 59 | 63 | 67 | 71 | 59 | 63 | 67 | 71 | 59 | 63 | 67 | 71 | 59 | 63 | 67 | 71 | 59 | 63 | 67 | 71 | 59 | 63 | 67 | 71 |
| 70 | 680 | MBh | 20.3 | 25.6 | 26.3 | | 24.4 | 24.7 | 25.5 | | 23.1 | 23.5 | 24.2 | | 21.5 | 21.8 | 22.5 | | 19.7 | 20.0 | 20.7 | | 18.0 | 18.3 | 19.0 | |
| | | S/T | 0.63 | 0.51 | 0.37 | | 0.59 | 0.51 | 0.38 | | 0.61 | 0.53 | 0.40 | | 0.63 | 0.55 | 0.42 | | 0.64 | 0.57 | 0.44 | | 0.69 | 0.62 | 0.49 | |
| | | ΔT | 22 | 19 | 15 | | 20 | 18 | 15 | | 20 | 18 | 15 | | 19 | 17 | 14 | | 18 | 16 | 13 | | 19 | 17 | 14 | |
| | | kW | 1.09 | 1.57 | 1.56 | | 1.78 | 1.78 | 1.78 | | 2.02 | 2.02 | 2.01 | | 2.28 | 2.27 | 2.27 | | 2.57 | 2.56 | 2.56 | | 2.91 | 2.90 | 2.90 | |
| | | Amps | 4.4 | 6.0 | 6.0 | | 6.8 | 6.8 | 6.8 | | 7.8 | 7.8 | 7.8 | | 8.9 | 8.9 | 8.9 | | 10.0 | 10.0 | 9.9 | | 10.1 | 10.2 | 10.2 | |
| | | Hi PR | 243 | 261 | 263 | | 303 | 304 | 306 | | 349 | 350 | 352 | | 399 | 401 | 402 | | 454 | 455 | 457 | | 513 | 514 | 516 | |
| | | Lo PR | 120 | 119 | 126 | | 121 | 125 | 132 | | 126 | 130 | 138 | | 130 | 134 | 141 | | 133 | 137 | 145 | | 138 | 142 | 150 | |
| | 800 | MBh | 23.2 | 26.0 | 26.7 | | 24.8 | 25.1 | 25.8 | | 23.5 | 23.8 | 24.6 | | 21.8 | 22.2 | 22.9 | | 20.0 | 20.3 | 21.0 | | 18.3 | 18.7 | 19.3 | |
| | | S/T | 0.69 | 0.58 | 0.45 | | 0.66 | 0.59 | 0.45 | | 0.68 | 0.61 | 0.48 | | 0.70 | 0.62 | 0.49 | | 0.72 | 0.64 | 0.51 | | 0.76 | 0.69 | 0.56 | |
| | | ΔT | 21 | 17 | 14 | | 19 | 17 | 13 | | 18 | 17 | 13 | | 18 | 16 | 13 | | 17 | 15 | 12 | | 17 | 16 | 13 | |
| | | kW | 1.28 | 1.58 | 1.58 | | 1.79 | 1.79 | 1.79 | | 2.03 | 2.03 | 2.03 | | 2.29 | 2.29 | 2.28 | | 2.58 | 2.58 | 2.57 | | 2.92 | 2.92 | 2.91 | |
| | | Amps | 5.0 | 6.0 | 6.0 | | 6.9 | 6.9 | 6.8 | | 7.9 | 7.9 | 7.9 | | 9.0 | 9.0 | 9.0 | | 10.0 | 10.0 | 10.0 | | 10.1 | 10.1 | 10.1 | |
| | | Hi PR | 251 | 263 | 265 | | 306 | 307 | 309 | | 352 | 353 | 355 | | 402 | 403 | 405 | | 457 | 458 | 460 | | 516 | 517 | 519 | |
| | | Lo PR | 120 | 121 | 129 | | 123 | 127 | 135 | | 128 | 132 | 140 | | 131 | 136 | 144 | | 135 | 139 | 147 | | 140 | 144 | 152 | |
| | 920 | MBh | 26.1 | 26.5 | 27.2 | | 25.2 | 25.6 | 26.3 | | 24.0 | 24.3 | 25.0 | | 22.3 | 22.6 | 23.3 | | 20.4 | 20.8 | 21.4 | | 18.8 | 19.1 | 19.7 | |
| | | S/T | 0.70 | 0.62 | 0.49 | | 0.70 | 0.62 | 0.49 | | 0.72 | 0.65 | 0.51 | | 0.74 | 0.66 | 0.53 | | 0.75 | 0.68 | 0.55 | | 0.80 | 0.73 | 0.60 | |
| | | ΔT | 18 | 16 | 13 | | 17 | 16 | 12 | | 17 | 15 | 12 | | 16 | 15 | 12 | | 16 | 14 | 11 | | 16 | 15 | 12 | |
| | | kW | 1.59 | 1.59 | 1.59 | | 1.80 | 1.80 | 1.80 | | 2.04 | 2.04 | 2.04 | | 2.30 | 2.30 | 2.29 | | 2.59 | 2.59 | 2.58 | | 2.93 | 2.93 | 2.92 | |
| | | Amps | 6.1 | 6.1 | 6.1 | | 6.9 | 6.9 | 6.9 | | 7.9 | 7.9 | 7.9 | | 9.1 | 9.0 | 9.0 | | 10.0 | 10.0 | 10.0 | | 10.1 | 10.1 | 10.1 | |
| | | Hi PR | 265 | 266 | 268 | | 308 | 310 | 311 | | 355 | 356 | 358 | | 405 | 406 | 408 | | 459 | 461 | 463 | | 518 | 520 | 522 | |
| | | Lo PR | 119 | 124 | 131 | | 125 | 129 | 137 | | 130 | 134 | 142 | | 134 | 138 | 146 | | 137 | 142 | 150 | | 142 | 146 | 154 | |
| 75 | 680 | MBh | 20.3 | 25.6 | 26.3 | 27.5 | 24.4 | 24.7 | 25.5 | 26.6 | 23.1 | 23.5 | 24.2 | 25.3 | 21.5 | 21.8 | 22.5 | 23.6 | 19.7 | 20.0 | 20.7 | 21.7 | 18.0 | 18.3 | 19.0 | 20.0 |
| | | S/T | 0.77 | 0.64 | 0.50 | 0.36 | 0.71 | 0.64 | 0.51 | 0.36 | 0.74 | 0.66 | 0.53 | 0.39 | 0.75 | 0.68 | 0.54 | 0.41 | 0.77 | 0.70 | 0.56 | 0.42 | 0.99 | 0.74 | 0.61 | 0.47 |
| | | ΔT | 26 | 23 | 19 | 16 | 24 | 22 | 19 | 15 | 24 | 22 | 18 | 15 | 23 | 21 | 18 | 14 | 22 | 20 | 17 | 14 | 22 | 20 | 17 | 14 |
| | | kW | 1.09 | 1.57 | 1.56 | 1.58 | 1.78 | 1.78 | 1.77 | 1.79 | 2.02 | 2.01 | 2.01 | 2.03 | 2.27 | 2.27 | 2.27 | 2.29 | 2.56 | 2.56 | 2.56 | 2.57 | 2.90 | 2.90 | 2.90 | 2.91 |
| | | Amps | 4.4 | 6.0 | 6.0 | 6.0 | 6.8 | 6.8 | 6.8 | 6.8 | 7.8 | 7.8 | 7.8 | 7.9 | 8.9 | 8.9 | 8.9 | 9.0 | 10.0 | 9.9 | 9.9 | 10.0 | 10.2 | 10.2 | 10.2 | 10.1 |
| | | Hi PR | 244 | 261 | 263 | 267 | 303 | 304 | 306 | 311 | 349 | 351 | 352 | 357 | 400 | 401 | 403 | 407 | 454 | 455 | 457 | 462 | 513 | 514 | 516 | 521 |
| | | Lo PR | 120 | 119 | 126 | 138 | 121 | 125 | 133 | 144 | 126 | 130 | 138 | 149 | 130 | 134 | 142 | 153 | 133 | 138 | 145 | 157 | 138 | 142 | 150 | 162 |
| | 800 | MBh | 23.2 | 26.0 | 26.7 | 27.9 | 24.8 | 25.1 | 25.9 | 27.0 | 23.5 | 23.9 | 24.6 | 25.7 | 21.9 | **22.2** | 22.9 | 24.0 | 20.0 | 20.3 | 21.0 | 22.1 | 18.4 | 18.7 | 19.3 | 20.3 |
| | | S/T | 0.83 | 0.71 | 0.58 | 0.44 | 0.79 | 0.71 | 0.58 | 0.44 | 0.81 | 0.73 | 0.60 | 0.46 | 0.82 | **0.75** | 0.62 | 0.48 | 1.00 | 0.77 | 0.64 | 0.50 | 0.99 | 0.82 | 0.68 | 0.55 |
| | | ΔT | 25 | 21 | 18 | 14 | 23 | 21 | 17 | 14 | 22 | 20 | 17 | 14 | 21 | **20** | 16 | 13 | 20 | 19 | 16 | 12 | 21 | 19 | 16 | 13 |
| | | kW | 1.28 | 1.58 | 1.58 | 1.59 | 1.79 | 1.79 | 1.79 | 1.80 | 2.03 | 2.03 | 2.02 | 2.04 | 2.29 | **2.29** | 2.28 | 2.30 | 2.58 | 2.58 | 2.57 | 2.59 | 2.92 | 2.92 | 2.91 | 2.93 |
| | | Amps | 5.0 | 6.0 | 6.0 | 6.1 | 6.9 | 6.8 | 6.8 | 6.9 | 7.9 | 7.9 | 7.8 | 7.9 | 9.0 | **9.0** | 9.0 | 9.0 | 10.0 | 10.0 | 10.0 | 10.0 | 10.1 | 10.1 | 10.1 | 10.1 |
| | | Hi PR | 251 | 264 | 265 | 270 | 306 | 307 | 309 | 314 | 352 | 353 | 355 | 360 | 402 | **403** | 405 | 410 | 457 | 458 | 460 | 465 | 516 | 517 | 519 | 524 |
| | | Lo PR | 120 | 121 | 129 | 140 | 123 | 127 | 135 | 146 | 128 | 132 | 140 | 151 | 132 | **136** | 144 | 155 | 135 | 140 | 147 | 159 | 140 | 144 | 152 | 164 |
| | 920 | MBh | 26.1 | 26.5 | 27.2 | 28.4 | 25.2 | 25.6 | 26.3 | 27.5 | 24.0 | 24.3 | 25.0 | 26.1 | 22.3 | 22.6 | 23.3 | 24.4 | 20.5 | 20.8 | 21.5 | 22.5 | 18.8 | 19.1 | 19.8 | 20.8 |
| | | S/T | 0.82 | 0.75 | 0.61 | 0.47 | 0.83 | 0.75 | 0.62 | 0.48 | 0.85 | 0.77 | 0.64 | 0.50 | 1.00 | 0.79 | 0.66 | 0.52 | 1.00 | 0.81 | 0.67 | 0.54 | 0.99 | 0.85 | 0.72 | 0.58 |
| | | ΔT | 22 | 20 | 17 | 13 | 21 | 20 | 16 | 13 | 21 | 19 | 16 | 13 | 20 | 19 | 15 | 12 | 19 | 18 | 15 | 11 | 20 | 18 | 15 | 12 |
| | | kW | 1.59 | 1.59 | 1.59 | 1.60 | 1.80 | 1.80 | 1.80 | 1.81 | 2.04 | 2.04 | 2.04 | 2.05 | 2.30 | 2.30 | 2.29 | 2.31 | 2.59 | 2.59 | 2.58 | 2.60 | 2.93 | 2.93 | 2.92 | 2.94 |
| | | Amps | 6.1 | 6.1 | 6.1 | 6.1 | 6.9 | 6.9 | 6.9 | 7.0 | 7.9 | 7.9 | 7.9 | 8.0 | 9.0 | 9.0 | 9.0 | 9.1 | 10.0 | 10.0 | 10.0 | 10.1 | 10.1 | 10.1 | 10.1 | 10.1 |
| | | Hi PR | 265 | 266 | 268 | 273 | 309 | 310 | 312 | 316 | 355 | 356 | 358 | 362 | 405 | 406 | 408 | 413 | 460 | 461 | 463 | 467 | 519 | 520 | 522 | 526 |
| | | Lo PR | 119 | 124 | 131 | 142 | 125 | 129 | 137 | 149 | 130 | 134 | 142 | 154 | 134 | 138 | 146 | 158 | 137 | 142 | 150 | 162 | 142 | 147 | 154 | 167 |

IDB = Entering Indoor Dry Bulb Temperature

Shaded area is ACCA (TVA) conditions

kW = Total system power

High and low pressures are measured at the liquid and suction service valves.

Amps = outdoor unit amps (comp.+fan)

Airflow may vary depending on actual ambient conditions and system operation modes.

## Expanded Cooling Data — DC6VSS2410A* / DFVE24BP1300A* (cont.)

| | | | Outdoor Ambient Temperature | | | | | | | | | | | | | | | | | | | | | | | |
|---|---|---|---|---|---|---|---|---|---|---|---|---|---|---|---|---|---|---|---|---|---|---|---|---|---|---|
| | | | 65°F | | | | 75°F | | | | 85°F | | | | 95°F | | | | 105°F | | | | 115°F | | | |
| | | | Entering Indoor Wet Bulb Temperature | | | | | | | | | | | | | | | | | | | | | | | |
| IDB | Airflow | | 59 | 63 | 67 | 71 | 59 | 63 | 67 | 71 | 59 | 63 | 67 | 71 | 59 | 63 | 67 | 71 | 59 | 63 | 67 | 71 | 59 | 63 | 67 | 71 |
| 80 | 680 | MBh | 21.9 | 25.7 | 26.5 | 27.6 | 24.5 | 24.9 | 25.6 | 26.7 | 23.3 | 23.6 | 24.3 | 25.4 | 21.6 | 21.9 | 22.6 | 23.7 | 19.8 | 20.1 | 20.8 | 21.8 | 18.1 | 18.4 | 19.1 | 20.1 |
| | | S/T | 0.89 | 0.76 | 0.63 | 0.48 | 0.84 | 0.76 | 0.63 | 0.49 | 1.01 | 0.78 | 0.65 | 0.51 | 1.00 | 0.80 | 0.67 | 0.53 | 1.00 | 0.82 | 0.69 | 0.55 | 0.99 | 0.86 | 0.73 | 0.59 |
| | | ΔT | 31 | 27 | 23 | 20 | 28 | 26 | 23 | 19 | 27 | 26 | 22 | 19 | 26 | 25 | 21 | 18 | 25 | 24 | 21 | 17 | 26 | 24 | 21 | 18 |
| | | kW | 1.19 | 1.57 | 1.56 | 1.58 | 1.78 | 1.78 | 1.78 | 1.79 | 2.02 | 2.02 | 2.01 | 2.03 | 2.28 | 2.27 | 2.27 | 2.29 | 2.56 | 2.56 | 2.56 | 2.58 | 2.90 | 2.90 | 2.90 | 2.92 |
| | | Amps | 4.7 | 6.0 | 6.0 | 6.0 | 6.8 | 6.8 | 6.8 | 6.9 | 7.8 | 7.8 | 7.8 | 7.9 | 8.9 | 8.9 | 8.9 | 9.0 | 10.0 | 10.0 | 9.9 | 10.0 | 10.2 | 10.2 | 10.2 | 10.1 |
| | | Hi PR | 247 | 261 | 263 | 268 | 304 | 305 | 307 | 311 | 350 | 351 | 353 | 358 | 400 | 401 | 403 | 408 | 455 | 456 | 458 | 462 | 514 | 515 | 517 | 522 |
| | | Lo PR | 120 | 120 | 127 | 138 | 121 | 126 | 133 | 144 | 126 | 131 | 138 | 150 | 130 | 134 | 142 | 154 | 134 | 138 | 146 | 158 | 138 | 143 | 151 | 163 |
| | 800 | MBh | 25.2 | 26.1 | 26.9 | 28.0 | 24.9 | 25.2 | 26.0 | 27.1 | 23.6 | 24.0 | 24.7 | 25.8 | 22.0 | 22.3 | **23.2** | 24.1 | 20.1 | 20.5 | 21.1 | 22.2 | 18.5 | 18.8 | 19.4 | 20.5 |
| | | S/T | 0.95 | 0.83 | 0.70 | 0.56 | 1.01 | 0.84 | 0.70 | 0.56 | 1.01 | 0.86 | 0.72 | 0.58 | 1.00 | 0.87 | **0.74** | 0.60 | 1.00 | 0.89 | 0.76 | 0.62 | 0.99 | 0.94 | 0.81 | 0.67 |
| | | ΔT | 30 | 25 | 22 | 18 | 27 | 25 | 21 | 18 | 26 | 24 | 21 | 18 | 25 | 23 | **20** | 17 | 24 | 23 | 19 | 16 | 25 | 23 | 20 | 17 |
| | | kW | 1.42 | 1.58 | 1.58 | 1.59 | 1.79 | 1.79 | 1.79 | 1.80 | 2.03 | 2.03 | 2.03 | 2.04 | 2.29 | 2.29 | **2.27** | 2.30 | 2.58 | 2.58 | 2.57 | 2.59 | 2.92 | 2.92 | 2.91 | 2.93 |
| | | Amps | 5.5 | 6.0 | 6.0 | 6.1 | 6.9 | 6.9 | 6.8 | 6.9 | 7.9 | 7.9 | 7.9 | 7.9 | 9.0 | 9.0 | **9.2** | 9.1 | 10.0 | 10.0 | 10.0 | 10.0 | 10.1 | 10.1 | 10.1 | 10.1 |
| | | Hi PR | 255 | 264 | 266 | 270 | 306 | 308 | 309 | 314 | 353 | 354 | 356 | 360 | 403 | 404 | **407** | 411 | 458 | 459 | 461 | 465 | 517 | 518 | 520 | 524 |
| | | Lo PR | 119 | 122 | 129 | 140 | 123 | 128 | 135 | 147 | 128 | 133 | 140 | 152 | 132 | 136 | **146** | 156 | 136 | 140 | 148 | 160 | 140 | 145 | 153 | 165 |
| | 920 | MBh | 26.2 | 26.6 | 27.4 | 28.5 | 25.4 | 25.7 | 26.5 | 27.6 | 24.1 | 24.4 | 25.2 | 26.3 | 22.4 | 22.8 | 23.5 | 24.5 | 20.6 | 20.9 | 21.6 | 22.6 | 18.9 | 19.2 | 19.9 | 20.9 |
| | | S/T | 0.95 | 0.87 | 0.74 | 0.60 | 1.01 | 0.87 | 0.74 | 0.60 | 1.01 | 0.89 | 0.76 | 0.62 | 1.00 | 0.91 | 0.78 | 0.64 | 1.00 | 0.93 | 0.80 | 0.66 | 0.99 | 0.99 | 0.84 | 0.70 |
| | | ΔT | 26 | 24 | 21 | 17 | 25 | 24 | 20 | 17 | 25 | 23 | 20 | 17 | 24 | 22 | 19 | 16 | 23 | 22 | 18 | 15 | 24 | 22 | 19 | 16 |
| | | kW | 1.59 | 1.59 | 1.59 | 1.60 | 1.80 | 1.80 | 1.80 | 1.81 | 2.04 | 2.04 | 2.04 | 2.05 | 2.30 | 2.30 | 2.29 | 2.31 | 2.59 | 2.59 | 2.58 | 2.60 | 2.93 | 2.93 | 2.92 | 2.94 |
| | | Amps | 6.1 | 6.1 | 6.1 | 6.1 | 6.9 | 6.9 | 6.9 | 7.0 | 7.9 | 7.9 | 7.9 | 8.0 | 9.1 | 9.0 | 9.0 | 9.1 | 10.0 | 10.0 | 10.0 | 10.1 | 10.1 | 10.1 | 10.1 | 10.1 |
| | | Hi PR | 266 | 267 | 269 | 273 | 309 | 310 | 312 | 317 | 355 | 356 | 358 | 363 | 405 | 407 | 408 | 413 | 460 | 461 | 463 | 468 | 519 | 520 | 522 | 527 |
| | | Lo PR | 120 | 124 | 131 | 143 | 126 | 130 | 138 | 149 | 130 | 135 | 143 | 154 | 134 | 139 | 146 | 158 | 138 | 142 | 150 | 162 | 142 | 147 | 155 | 167 |
| 85 | 680 | MBh | 23.4 | 26.1 | 26.9 | 28.1 | 24.9 | 25.3 | 26.0 | 27.1 | 23.7 | 24.0 | 24.7 | 25.8 | 22.0 | 22.3 | 23.0 | 24.1 | 20.2 | 20.5 | 21.2 | 22.2 | 18.5 | 18.8 | 19.5 | 20.5 |
| | | S/T | 1.01 | 0.86 | 0.73 | 0.58 | 1.01 | 0.86 | 0.73 | 0.59 | 1.01 | 0.88 | 0.75 | 0.61 | 1.00 | 1.00 | 0.77 | 0.63 | 1.00 | 1.00 | 0.78 | 0.65 | 0.99 | 0.99 | 0.83 | 0.69 |
| | | ΔT | 35 | 31 | 27 | 23 | 31 | 30 | 26 | 23 | 31 | 29 | 26 | 22 | 30 | 28 | 25 | 22 | 29 | 27 | 24 | 21 | 29 | 27 | 24 | 21 |
| | | kW | 1.27 | 1.57 | 1.57 | 1.58 | 1.78 | 1.78 | 1.78 | 1.79 | 2.02 | 2.02 | 2.02 | 2.03 | 2.28 | 2.28 | 2.27 | 2.29 | 2.57 | 2.57 | 2.56 | 2.58 | 2.91 | 2.91 | 2.90 | 2.92 |
| | | Amps | 5.0 | 6.0 | 6.0 | 6.0 | 6.8 | 6.8 | 6.8 | 6.9 | 7.8 | 7.8 | 7.8 | 7.9 | 9.0 | 9.0 | 8.9 | 9.0 | 10.0 | 10.0 | 10.0 | 10.0 | 10.1 | 10.1 | 10.2 | 10.1 |
| | | Hi PR | 250 | 263 | 265 | 269 | 305 | 306 | 308 | 313 | 351 | 352 | 354 | 359 | 401 | 402 | 404 | 409 | 456 | 457 | 459 | 464 | 515 | 516 | 518 | 523 |
| | | Lo PR | 120 | 121 | 129 | 140 | 123 | 127 | 135 | 146 | 128 | 132 | 140 | 152 | 132 | 136 | 144 | 156 | 135 | 140 | 148 | 159 | 140 | 144 | 152 | 164 |
| | 800 | MBh | 26.2 | 26.5 | 27.3 | 28.4 | 25.3 | 25.7 | 26.4 | 27.5 | 24.0 | 24.4 | 25.1 | 26.2 | 22.4 | 22.7 | 23.4 | 24.5 | 20.5 | 20.8 | 21.5 | 22.6 | 18.8 | 19.2 | 19.8 | 20.8 |
| | | S/T | 1.01 | 0.93 | 0.80 | 0.66 | 1.01 | 0.94 | 0.80 | 0.66 | 1.01 | 0.96 | 0.82 | 0.68 | 1.00 | 1.00 | 0.84 | 0.70 | 1.00 | 1.00 | 0.86 | 0.72 | 0.99 | 0.99 | 0.90 | 0.77 |
| | | ΔT | 31 | 29 | 26 | 22 | 30 | 28 | 25 | 21 | 30 | 28 | 25 | 21 | 29 | 27 | 24 | 20 | 27 | 26 | 23 | 19 | 28 | 26 | 23 | 20 |
| | | kW | 1.59 | 1.58 | 1.58 | 1.60 | 1.80 | 1.80 | 1.79 | 1.81 | 2.03 | 2.03 | 2.03 | 2.05 | 2.29 | 2.29 | 2.29 | 2.30 | 2.58 | 2.58 | 2.58 | 2.59 | 2.92 | 2.92 | 2.92 | 2.93 |
| | | Amps | 6.1 | 6.1 | 6.0 | 6.1 | 6.9 | 6.9 | 6.9 | 6.9 | 7.9 | 7.9 | 7.9 | 7.9 | 9.0 | 9.0 | 9.0 | 9.1 | 10.0 | 10.0 | 10.0 | 10.0 | 10.1 | 10.1 | 10.1 | 10.1 |
| | | Hi PR | 264 | 265 | 267 | 272 | 308 | 309 | 311 | 315 | 354 | 355 | 357 | 361 | 404 | 405 | 407 | 412 | 459 | 460 | 462 | 467 | 518 | 519 | 521 | 526 |
| | | Lo PR | 119 | 124 | 131 | 142 | 125 | 129 | 137 | 149 | 130 | 134 | 142 | 154 | 134 | 138 | 146 | 158 | 137 | 142 | 150 | 162 | 142 | 146 | 154 | 167 |
| | 920 | MBh | 26.7 | 27.0 | 27.8 | 28.9 | 25.8 | 26.1 | 26.9 | 28.0 | 24.5 | 24.8 | 25.6 | 26.7 | 22.8 | 23.2 | 23.9 | 24.9 | 21.0 | 21.3 | 22.0 | 23.0 | 19.3 | 19.6 | 20.3 | 21.3 |
| | | S/T | 1.01 | 0.97 | 0.84 | 0.70 | 1.01 | 0.97 | 0.84 | 0.70 | 1.01 | 1.01 | 0.86 | 0.72 | 1.00 | 1.00 | 0.88 | 0.74 | 1.00 | 1.00 | 0.89 | 0.76 | 0.99 | 0.99 | 0.94 | 0.80 |
| | | ΔT | 30 | 28 | 25 | 21 | 29 | 27 | 24 | 20 | 29 | 27 | 23 | 20 | 27 | 26 | 23 | 19 | 26 | 25 | 22 | 18 | 27 | 25 | 22 | 19 |
| | | kW | 1.60 | 1.59 | 1.59 | 1.61 | 1.81 | 1.81 | 1.80 | 1.82 | 2.05 | 2.04 | 2.04 | 2.06 | 2.30 | 2.30 | 2.30 | 2.31 | 2.59 | 2.59 | 2.59 | 2.60 | 2.93 | 2.93 | 2.93 | 2.94 |
| | | Amps | 6.1 | 6.1 | 6.1 | 6.1 | 6.9 | 6.9 | 6.9 | 7.0 | 7.9 | 7.9 | 7.9 | 8.0 | 9.1 | 9.1 | 9.0 | 9.1 | 10.0 | 10.0 | 10.0 | 10.1 | 10.1 | 10.1 | 10.1 | 10.1 |
| | | Hi PR | 267 | 268 | 270 | 274 | 310 | 311 | 313 | 318 | 356 | 358 | 359 | 364 | 407 | 408 | 410 | 414 | 461 | 463 | 464 | 469 | 520 | 522 | 524 | 528 |
| | | Lo PR | 122 | 126 | 133 | 145 | 127 | 132 | 139 | 151 | 132 | 137 | 144 | 156 | 136 | 140 | 148 | 160 | 139 | 144 | 152 | 164 | 144 | 149 | 157 | 169 |

IDB = Entering Indoor Dry Bulb Temperature

Shaded area is AHRI conditions

kW = Total system power

High and low pressures are measured at the liquid and suction service valves.

Amps = outdoor unit amps (comp.+fan)

Airflow may vary depending on actual ambient conditions and system operation modes.

# Expanded Cooling Data — DC6VSS3010A* / DFVE36CP1300A*

| | | | Outdoor Ambient Temperature | | | | | | | | | | | | | | | | | | | | | | | |
|---|---|---|---|---|---|---|---|---|---|---|---|---|---|---|---|---|---|---|---|---|---|---|---|---|---|---|
| | | | 65°F | | | | 75°F | | | | 85°F | | | | 95°F | | | | 105°F | | | | 115°F | | | |
| | | | Entering Indoor Wet Bulb Temperature | | | | | | | | | | | | | | | | | | | | | | | |
| IDB | Airflow | | 59 | 63 | 67 | 71 | 59 | 63 | 67 | 71 | 59 | 63 | 67 | 71 | 59 | 63 | 67 | 71 | 59 | 63 | 67 | 71 | 59 | 63 | 67 | 71 |
| 70 | 860 | MBh | 31.0 | 31.3 | 32.2 | | 29.8 | 30.3 | 31.2 | | 28.3 | 28.7 | 29.6 | | 26.3 | 26.7 | 27.5 | | 24.0 | 24.4 | 25.3 | | 22.0 | 22.4 | 23.2 | |
| | | S/T | 0.60 | 0.52 | 0.38 | | 0.60 | 0.52 | 0.39 | | 0.63 | 0.55 | 0.41 | | 0.65 | 0.57 | 0.44 | | 0.68 | 0.60 | 0.46 | | 0.73 | 0.66 | 0.52 | |
| | | ΔT | 22 | 18 | 15 | | 20 | 18 | 14 | | 19 | 18 | 14 | | 19 | 17 | 14 | | 18 | 16 | 13 | | 18 | 17 | 14 | |
| | | kW | 1.82 | 2.03 | 2.02 | | 2.27 | 2.27 | 2.27 | | 2.54 | 2.54 | 2.54 | | 2.83 | 2.83 | 2.83 | | 3.15 | 3.15 | 3.15 | | 3.53 | 3.52 | 3.52 | |
| | | Amps | 6.7 | 7.6 | 7.5 | | 8.6 | 8.6 | 8.6 | | 9.8 | 9.8 | 9.8 | | 11.0 | 11.0 | 11.0 | | 12.4 | 12.4 | 12.4 | | 13.9 | 13.9 | 13.9 | |
| | | Hi PR | 274 | 275 | 277 | | 317 | 318 | 320 | | 362 | 364 | 365 | | 411 | 412 | 414 | | 464 | 465 | 467 | | 520 | 521 | 523 | |
| | | Lo PR | 119 | 120 | 126 | | 123 | 126 | 133 | | 127 | 131 | 138 | | 131 | 135 | 142 | | 135 | 138 | 145 | | 140 | 143 | 150 | |
| | 1010 | MBh | 31.5 | 31.8 | 32.7 | | 30.3 | 30.7 | 31.6 | | 28.8 | 29.2 | 30.1 | | 26.7 | 27.1 | 28.0 | | 24.5 | 24.9 | 25.7 | | 22.4 | 22.8 | 23.6 | |
| | | S/T | 0.68 | 0.59 | 0.46 | | 0.68 | 0.60 | 0.46 | | 0.71 | 0.63 | 0.49 | | 0.73 | 0.65 | 0.51 | | 0.76 | 0.68 | 0.54 | | 0.81 | 0.73 | 0.59 | |
| | | ΔT | 21 | 17 | 13 | | 18 | 16 | 13 | | 18 | 16 | 13 | | 17 | 16 | 12 | | 17 | 15 | 12 | | 17 | 16 | 13 | |
| | | kW | 1.84 | 2.04 | 2.04 | | 2.29 | 2.29 | 2.28 | | 2.56 | 2.56 | 2.55 | | 2.85 | 2.85 | 2.84 | | 3.17 | 3.17 | 3.16 | | 3.54 | 3.54 | 3.54 | |
| | | Amps | 6.8 | 7.6 | 7.6 | | 8.7 | 8.7 | 8.7 | | 9.9 | 9.9 | 9.8 | | 11.1 | 11.1 | 11.1 | | 12.5 | 12.4 | 12.4 | | 14.0 | 14.0 | 14.0 | |
| | | Hi PR | 277 | 278 | 280 | | 320 | 321 | 323 | | 365 | 366 | 368 | | 414 | 415 | 417 | | 467 | 468 | 470 | | 523 | 524 | 526 | |
| | | Lo PR | 121 | 122 | 129 | | 125 | 128 | 135 | | 129 | 133 | 140 | | 133 | 137 | 144 | | 137 | 140 | 147 | | 142 | 145 | 152 | |
| | 1160 | MBh | 32.0 | 32.4 | 33.3 | | 30.9 | 31.3 | 32.2 | | 29.3 | 29.7 | 30.6 | | 27.3 | 27.7 | 28.5 | | 25.0 | 25.4 | 26.2 | | 23.0 | 23.3 | 24.2 | |
| | | S/T | 0.71 | 0.63 | 0.49 | | 0.72 | 0.64 | 0.50 | | 0.74 | 0.67 | 0.53 | | 0.77 | 0.69 | 0.55 | | 0.79 | 0.72 | 0.58 | | 1.01 | 0.77 | 0.63 | |
| | | ΔT | 18 | 16 | 12 | | 17 | 15 | 12 | | 17 | 15 | 12 | | 16 | 15 | 11 | | 16 | 14 | 11 | | 16 | 15 | 12 | |
| | | kW | 2.06 | 2.06 | 2.05 | | 2.30 | 2.30 | 2.30 | | 2.57 | 2.57 | 2.57 | | 2.86 | 2.86 | 2.86 | | 3.18 | 3.18 | 3.18 | | 3.55 | 3.55 | 3.55 | |
| | | Amps | 7.7 | 7.7 | 7.7 | | 8.8 | 8.7 | 8.7 | | 9.9 | 9.9 | 9.9 | | 11.2 | 11.1 | 11.1 | | 12.5 | 12.5 | 12.5 | | 14.1 | 14.1 | 14.0 | |
| | | Hi PR | 279 | 280 | 282 | | 323 | 324 | 326 | | 368 | 369 | 371 | | 417 | 418 | 420 | | 469 | 471 | 472 | | 526 | 527 | 529 | |
| | | Lo PR | 121 | 124 | 131 | | 127 | 130 | 137 | | 132 | 135 | 142 | | 136 | 139 | 146 | | 139 | 143 | 150 | | 144 | 147 | 155 | |
| 75 | 860 | MBh | 31.0 | 31.3 | 32.3 | 33.7 | 29.9 | 30.3 | 31.2 | 32.6 | 28.3 | 28.7 | 29.6 | 31.0 | 26.3 | 26.7 | 27.6 | 28.9 | 24.1 | 24.5 | 25.3 | 26.6 | 22.0 | 22.4 | 23.2 | 24.5 |
| | | S/T | 0.73 | 0.64 | 0.51 | 0.37 | 0.73 | 0.65 | 0.52 | 0.37 | 0.76 | 0.68 | 0.55 | 0.40 | 0.78 | 0.71 | 0.57 | 0.42 | 1.01 | 0.73 | 0.59 | 0.45 | 1.01 | 0.79 | 0.65 | 0.50 |
| | | ΔT | 27 | 22 | 19 | 15 | 24 | 22 | 18 | 15 | 23 | 21 | 18 | 15 | 22 | 21 | 17 | 14 | 21 | 20 | 17 | 14 | 22 | 20 | 17 | 14 |
| | | kW | 1.82 | 2.03 | 2.02 | 2.04 | 2.27 | 2.27 | 2.27 | 2.29 | 2.54 | 2.54 | 2.54 | 2.56 | 2.83 | 2.83 | 2.83 | 2.84 | 3.15 | 3.15 | 3.14 | 3.16 | 3.52 | 3.52 | 3.52 | 3.54 |
| | | Amps | 6.7 | 7.5 | 7.5 | 7.6 | 8.6 | 8.6 | 8.6 | 8.7 | 9.8 | 9.8 | 9.8 | 9.8 | 11.0 | 11.0 | 11.0 | 11.1 | 12.4 | 12.4 | 12.4 | 12.4 | 13.9 | 13.9 | 13.9 | 14.0 |
| | | Hi PR | 274 | 275 | 277 | 282 | 317 | 318 | 320 | 325 | 363 | 364 | 366 | 370 | 411 | 413 | 415 | 419 | 464 | 465 | 467 | 472 | 520 | 521 | 523 | 528 |
| | | Lo PR | 119 | 120 | 127 | 138 | 123 | 126 | 133 | 144 | 127 | 131 | 138 | 149 | 131 | 135 | 142 | 153 | 135 | 138 | 145 | 157 | 140 | 143 | 150 | 162 |
| | 1010 | MBh | 31.5 | 31.8 | 32.7 | 34.2 | 30.3 | 30.8 | 31.7 | 33.0 | 28.8 | 29.2 | 30.1 | 31.4 | 26.7 | **27.1** | 28.0 | 29.3 | 24.5 | 24.9 | 25.7 | 27.0 | 22.5 | 22.8 | 23.6 | 24.9 |
| | | S/T | 0.81 | 0.72 | 0.58 | 0.44 | 0.81 | 0.73 | 0.59 | 0.45 | 0.84 | 0.76 | 0.62 | 0.48 | 1.00 | **0.78** | 0.64 | 0.50 | 1.01 | 0.81 | 0.67 | 0.52 | 1.01 | 0.87 | 0.73 | 0.58 |
| | | ΔT | 25 | 21 | 18 | 14 | 22 | 20 | 17 | 14 | 22 | 20 | 17 | 13 | 21 | **19** | 16 | 13 | 20 | 19 | 15 | 12 | 21 | 19 | 16 | 13 |
| | | kW | 1.84 | 2.04 | 2.04 | 2.06 | 2.29 | 2.29 | 2.28 | 2.30 | 2.56 | 2.56 | 2.55 | 2.57 | 2.85 | **2.85** | 2.84 | 2.86 | 3.17 | 3.17 | 3.16 | 3.18 | 3.54 | 3.54 | 3.53 | 3.55 |
| | | Amps | 6.8 | 7.6 | 7.6 | 7.7 | 8.7 | 8.7 | 8.7 | 8.7 | 9.9 | 9.8 | 9.8 | 9.9 | 11.1 | **11.1** | 11.1 | 11.1 | 12.4 | 12.4 | 12.4 | 12.5 | 14.0 | 14.0 | 14.0 | 14.1 |
| | | Hi PR | 277 | 278 | 280 | 285 | 320 | 321 | 323 | 328 | 365 | 367 | 368 | 373 | 414 | **415** | 417 | 422 | 467 | 468 | 470 | 475 | 523 | 524 | 526 | 531 |
| | | Lo PR | 121 | 122 | 129 | 140 | 125 | 128 | 135 | 146 | 130 | 133 | 140 | 151 | 133 | **137** | 144 | 155 | 137 | 140 | 147 | 159 | 142 | 145 | 152 | 164 |
| | 1160 | MBh | 32.0 | 32.4 | 33.3 | 34.8 | 30.9 | 31.3 | 32.2 | 33.6 | 29.4 | 29.8 | 30.6 | 32.0 | 27.3 | 27.7 | 28.6 | 29.9 | 25.0 | 25.4 | 26.3 | 27.5 | 23.0 | 23.4 | 24.2 | 25.4 |
| | | S/T | 0.83 | 0.76 | 0.62 | 0.48 | 0.85 | 0.77 | 0.63 | 0.49 | 0.87 | 0.80 | 0.66 | 0.52 | 1.00 | 0.82 | 0.68 | 0.54 | 1.01 | 0.85 | 0.71 | 0.56 | 1.01 | 0.90 | 0.77 | 0.62 |
| | | ΔT | 22 | 20 | 16 | 13 | 21 | 19 | 16 | 12 | 21 | 19 | 16 | 12 | 20 | 18 | 15 | 12 | 19 | 18 | 14 | 11 | 20 | 18 | 15 | 12 |
| | | kW | 2.06 | 2.06 | 2.05 | 2.07 | 2.30 | 2.30 | 2.30 | 2.32 | 2.57 | 2.57 | 2.57 | 2.59 | 2.86 | 2.86 | 2.85 | 2.87 | 3.18 | 3.18 | 3.17 | 3.19 | 3.55 | 3.55 | 3.55 | 3.57 |
| | | Amps | 7.7 | 7.7 | 7.7 | 7.7 | 8.7 | 8.7 | 8.7 | 8.8 | 9.9 | 9.9 | 9.9 | 10.0 | 11.1 | 11.1 | 11.1 | 11.2 | 12.5 | 12.5 | 12.5 | 12.6 | 14.1 | 14.0 | 14.0 | 14.1 |
| | | Hi PR | 279 | 281 | 283 | 287 | 323 | 324 | 326 | 331 | 368 | 369 | 371 | 376 | 417 | 418 | 420 | 425 | 470 | 471 | 473 | 477 | 526 | 527 | 529 | 534 |
| | | Lo PR | 121 | 124 | 131 | 142 | 127 | 130 | 137 | 149 | 132 | 135 | 142 | 154 | 136 | 139 | 146 | 158 | 139 | 143 | 150 | 162 | 144 | 147 | 155 | 167 |

IDB = Entering Indoor Dry Bulb Temperature

Shaded area is ACCA (TVA) conditions

kW = Total system power

High and low pressures are measured at the liquid and suction service valves.

Amps = outdoor unit amps (comp.+fan)

Airflow may vary depending on actual ambient conditions and system operation modes.

# Expanded Cooling Data — DC6VSS3010A* / DFVE36CP1300A* (cont.)

| | | | Outdoor Ambient Temperature | | | | | | | | | | | | | | | | | | | | | | | |
|---|---|---|---|---|---|---|---|---|---|---|---|---|---|---|---|---|---|---|---|---|---|---|---|---|---|---|
| | | | 65°F | | | | 75°F | | | | 85°F | | | | 95°F | | | | 105°F | | | | 115°F | | | |
| | | | Entering Indoor Wet Bulb Temperature | | | | | | | | | | | | | | | | | | | | | | | |
| IDB | Airflow | | 59 | 63 | 67 | 71 | 59 | 63 | 67 | 71 | 59 | 63 | 67 | 71 | 59 | 63 | 67 | 71 | 59 | 63 | 67 | 71 | 59 | 63 | 67 | 71 |
| 80 | 860 | MBh | 31.2 | 31.5 | 32.4 | 33.8 | 30.0 | 30.4 | 31.3 | 32.7 | 28.5 | 28.9 | 29.8 | 31.1 | 26.4 | 26.9 | 27.7 | 29.0 | 24.2 | 24.6 | 25.4 | 26.7 | 22.2 | 22.6 | 23.4 | 24.6 |
| | | S/T | 0.86 | 0.77 | 0.63 | 0.49 | 0.99 | 0.78 | 0.64 | 0.50 | 1.00 | 0.81 | 0.67 | 0.53 | 1.00 | 0.83 | 0.70 | 0.55 | 1.01 | 0.86 | 0.72 | 0.58 | 1.01 | 0.92 | 0.78 | 0.63 |
| | | ΔT | 31 | 26 | 23 | 19 | 27 | 26 | 22 | 19 | 27 | 25 | 22 | 19 | 26 | 24 | 21 | 18 | 25 | 23 | 20 | 17 | 25 | 24 | 21 | 18 |
| | | kW | 1.82 | 2.03 | 2.02 | 2.04 | 2.27 | 2.27 | 2.27 | 2.29 | 2.54 | 2.54 | 2.54 | 2.56 | 2.83 | 2.83 | 2.83 | 2.85 | 3.15 | 3.15 | 3.15 | 3.17 | 3.53 | 3.52 | 3.52 | 3.54 |
| | | Amps | 6.7 | 7.6 | 7.5 | 7.6 | 8.6 | 8.6 | 8.6 | 8.7 | 9.8 | 9.8 | 9.8 | 9.8 | 11.0 | 11.0 | 11.0 | 11.1 | 12.4 | 12.4 | 12.4 | 12.4 | 13.9 | 13.9 | 13.9 | 14.0 |
| | | Hi PR | 274 | 276 | 278 | 282 | 318 | 319 | 321 | 326 | 363 | 364 | 366 | 371 | 412 | 413 | 415 | 420 | 465 | 466 | 468 | 472 | 521 | 522 | 524 | 529 |
| | | Lo PR | 120 | 120 | 127 | 138 | 123 | 126 | 133 | 144 | 128 | 131 | 138 | 150 | 132 | 135 | 142 | 154 | 135 | 139 | 146 | 158 | 140 | 144 | 151 | 163 |
| | 1010 | MBh | 31.5 | 32.0 | 32.9 | 34.3 | 30.5 | 30.9 | 31.8 | 33.2 | 28.9 | 29.4 | 30.2 | 31.6 | 26.9 | 27.3 | **28.4** | 29.5 | 24.6 | 25.0 | 25.9 | 27.1 | 22.6 | 23.0 | 23.8 | 25.0 |
| | | S/T | 0.92 | 0.85 | 0.71 | 0.57 | 0.99 | 0.86 | 0.72 | 0.58 | 1.00 | 0.89 | 0.75 | 0.60 | 1.00 | 0.91 | **0.77** | 0.63 | 1.01 | 0.94 | 0.80 | 0.65 | 1.01 | 1.01 | 0.86 | 0.71 |
| | | ΔT | 27 | 25 | 22 | 18 | 26 | 24 | 21 | 18 | 26 | 24 | 21 | 17 | 25 | 23 | **20** | 17 | 24 | 22 | 19 | 16 | 24 | 23 | 20 | 17 |
| | | kW | 2.05 | 2.04 | 2.04 | 2.06 | 2.29 | 2.29 | 2.28 | 2.30 | 2.56 | 2.56 | 2.55 | 2.57 | 2.85 | 2.85 | **2.84** | 2.86 | 3.17 | 3.17 | 3.16 | 3.18 | 3.54 | 3.54 | 3.53 | 3.55 |
| | | Amps | 7.6 | 7.6 | 7.6 | 7.7 | 8.7 | 8.7 | 8.7 | 8.8 | 9.9 | 9.9 | 9.8 | 9.9 | 11.1 | 11.1 | **11.0** | 11.2 | 12.5 | 12.4 | 12.4 | 12.5 | 14.0 | 14.0 | 14.0 | 14.1 |
| | | Hi PR | 277 | 278 | 280 | 285 | 321 | 322 | 324 | 328 | 366 | 367 | 369 | 374 | 415 | 416 | **415** | 423 | 467 | 469 | 470 | 475 | 524 | 525 | 527 | 531 |
| | | Lo PR | 119 | 122 | 129 | 140 | 125 | 128 | 135 | 147 | 130 | 133 | 140 | 152 | 134 | 137 | **146** | 156 | 137 | 141 | 148 | 160 | 142 | 146 | 153 | 165 |
| | 1160 | MBh | 32.1 | 32.6 | 33.5 | 34.9 | 31.1 | 31.5 | 32.4 | 33.8 | 29.5 | 29.9 | 30.8 | 32.1 | 27.4 | 27.8 | 28.7 | 30.0 | 25.2 | 25.6 | 26.4 | 27.7 | 23.1 | 23.5 | 24.3 | 25.5 |
| | | S/T | 0.96 | 0.88 | 0.75 | 0.61 | 0.99 | 0.89 | 0.76 | 0.61 | 1.00 | 0.92 | 0.79 | 0.64 | 1.00 | 0.95 | 0.81 | 0.67 | 1.01 | 0.98 | 0.84 | 0.69 | 1.01 | 1.01 | 0.89 | 0.75 |
| | | ΔT | 26 | 24 | 20 | 17 | 25 | 23 | 20 | 16 | 25 | 23 | 20 | 16 | 24 | 22 | 19 | 16 | 23 | 21 | 18 | 15 | 23 | 22 | 19 | 16 |
| | | kW | 2.06 | 2.06 | 2.05 | 2.07 | 2.30 | 2.30 | 2.30 | 2.32 | 2.57 | 2.57 | 2.57 | 2.59 | 2.86 | 2.86 | 2.86 | 2.88 | 3.18 | 3.18 | 3.18 | 3.19 | 3.55 | 3.55 | 3.55 | 3.57 |
| | | Amps | 7.7 | 7.7 | 7.7 | 7.8 | 8.8 | 8.7 | 8.7 | 8.8 | 9.9 | 9.9 | 9.9 | 10.0 | 11.2 | 11.1 | 11.1 | 11.2 | 12.5 | 12.5 | 12.5 | 12.6 | 14.1 | 14.1 | 14.0 | 14.1 |
| | | Hi PR | 280 | 281 | 283 | 288 | 323 | 324 | 326 | 331 | 369 | 370 | 372 | 376 | 417 | 419 | 421 | 425 | 470 | 471 | 473 | 478 | 526 | 527 | 529 | 534 |
| | | Lo PR | 122 | 125 | 132 | 143 | 127 | 131 | 138 | 149 | 132 | 136 | 143 | 154 | 136 | 139 | 147 | 158 | 140 | 143 | 150 | 162 | 144 | 148 | 155 | 167 |
| 85 | 860 | MBh | 31.7 | 32.0 | 32.9 | 34.4 | 30.5 | 31.0 | 31.9 | 33.2 | 29.0 | 29.4 | 30.3 | 31.6 | 26.9 | 27.3 | 28.2 | 29.5 | 24.7 | 25.1 | 25.9 | 27.2 | 22.6 | 23.0 | 23.8 | 25.1 |
| | | S/T | 0.99 | 0.87 | 0.74 | 0.59 | 0.99 | 0.88 | 0.75 | 0.60 | 1.00 | 0.91 | 0.78 | 0.63 | 1.00 | 1.00 | 0.80 | 0.65 | 1.01 | 1.01 | 0.82 | 0.68 | 1.01 | 1.01 | 0.88 | 0.73 |
| | | ΔT | 35 | 30 | 27 | 23 | 31 | 29 | 26 | 22 | 30 | 29 | 25 | 22 | 29 | 28 | 25 | 21 | 28 | 27 | 24 | 20 | 29 | 27 | 24 | 21 |
| | | kW | 1.83 | 2.03 | 2.03 | 2.05 | 2.28 | 2.28 | 2.27 | 2.29 | 2.55 | 2.55 | 2.54 | 2.56 | 2.84 | 2.84 | 2.83 | 2.85 | 3.16 | 3.16 | 3.15 | 3.17 | 3.53 | 3.53 | 3.52 | 3.54 |
| | | Amps | 6.8 | 7.6 | 7.6 | 7.6 | 8.6 | 8.6 | 8.6 | 8.7 | 9.8 | 9.8 | 9.8 | 9.9 | 11.1 | 11.0 | 11.0 | 11.1 | 12.4 | 12.4 | 12.4 | 12.5 | 14.0 | 14.0 | 13.9 | 14.0 |
| | | Hi PR | 276 | 277 | 279 | 284 | 319 | 320 | 322 | 327 | 364 | 366 | 367 | 372 | 413 | 414 | 416 | 421 | 466 | 467 | 469 | 474 | 522 | 523 | 525 | 530 |
| | | Lo PR | 122 | 122 | 129 | 140 | 125 | 128 | 135 | 146 | 130 | 133 | 140 | 151 | 134 | 137 | 144 | 156 | 137 | 141 | 148 | 159 | 142 | 145 | 153 | 164 |
| | 1010 | MBh | 32.1 | 32.5 | 33.4 | 34.8 | 31.0 | 31.4 | 32.3 | 33.7 | 29.4 | 29.8 | 30.7 | 32.1 | 27.4 | 27.8 | 28.6 | 29.9 | 25.1 | 25.5 | 26.3 | 27.6 | 23.1 | 23.4 | 24.2 | 25.5 |
| | | S/T | 0.99 | 0.95 | 0.81 | 0.67 | 0.99 | 0.96 | 0.82 | 0.68 | 1.00 | 0.99 | 0.85 | 0.71 | 1.00 | 1.00 | 0.88 | 0.73 | 1.01 | 1.01 | 0.90 | 0.76 | 1.01 | 1.01 | 0.96 | 0.81 |
| | | ΔT | 30 | 29 | 25 | 22 | 30 | 28 | 25 | 21 | 29 | 27 | 24 | 21 | 28 | 26 | 23 | 20 | 27 | 25 | 22 | 19 | 27 | 26 | 23 | 20 |
| | | kW | 2.05 | 2.05 | 2.04 | 2.06 | 2.30 | 2.29 | 2.29 | 2.31 | 2.57 | 2.56 | 2.56 | 2.58 | 2.85 | 2.85 | 2.85 | 2.87 | 3.17 | 3.17 | 3.17 | 3.19 | 3.55 | 3.54 | 3.54 | 3.56 |
| | | Amps | 7.7 | 7.6 | 7.6 | 7.7 | 8.7 | 8.7 | 8.7 | 8.8 | 9.9 | 9.9 | 9.9 | 9.9 | 11.1 | 11.1 | 11.1 | 11.2 | 12.5 | 12.5 | 12.4 | 12.5 | 14.0 | 14.0 | 14.0 | 14.1 |
| | | Hi PR | 279 | 280 | 282 | 286 | 322 | 323 | 325 | 330 | 367 | 368 | 370 | 375 | 416 | 417 | 419 | 424 | 469 | 470 | 472 | 477 | 525 | 526 | 528 | 533 |
| | | Lo PR | 121 | 124 | 131 | 142 | 127 | 130 | 137 | 149 | 132 | 135 | 142 | 154 | 136 | 139 | 146 | 158 | 139 | 143 | 150 | 162 | 144 | 147 | 155 | 167 |
| | 1160 | MBh | 32.7 | 33.1 | 34.0 | 35.4 | 31.6 | 32.0 | 32.9 | 34.3 | 30.0 | 30.4 | 31.3 | 32.6 | 27.9 | 28.3 | 29.2 | 30.5 | 25.6 | 26.0 | 26.9 | 28.1 | 23.6 | 24.0 | 24.8 | 26.0 |
| | | S/T | 0.99 | 0.99 | 0.85 | 0.71 | 0.99 | 0.99 | 0.86 | 0.72 | 1.00 | 1.00 | 0.89 | 0.75 | 1.00 | 1.00 | 0.91 | 0.77 | 1.01 | 1.01 | 0.94 | 0.79 | 1.01 | 1.01 | 1.00 | 0.85 |
| | | ΔT | 29 | 28 | 24 | 21 | 29 | 27 | 23 | 20 | 28 | 26 | 23 | 20 | 27 | 25 | 22 | 19 | 26 | 24 | 21 | 18 | 26 | 25 | 22 | 19 |
| | | kW | 2.06 | 2.06 | 2.06 | 2.08 | 2.31 | 2.31 | 2.30 | 2.32 | 2.58 | 2.58 | 2.57 | 2.59 | 2.87 | 2.87 | 2.86 | 2.88 | 3.19 | 3.18 | 3.18 | 3.20 | 3.56 | 3.56 | 3.55 | 3.57 |
| | | Amps | 7.7 | 7.7 | 7.7 | 7.8 | 8.8 | 8.8 | 8.7 | 8.8 | 9.9 | 9.9 | 9.9 | 10.0 | 11.2 | 11.2 | 11.1 | 11.2 | 12.5 | 12.5 | 12.5 | 12.6 | 14.1 | 14.1 | 14.1 | 14.1 |
| | | Hi PR | 281 | 282 | 284 | 289 | 325 | 326 | 328 | 332 | 370 | 371 | 373 | 378 | 419 | 420 | 422 | 427 | 471 | 473 | 475 | 479 | 528 | 529 | 531 | 535 |
| | | Lo PR | 123 | 127 | 133 | 145 | 129 | 132 | 139 | 151 | 134 | 137 | 144 | 156 | 138 | 141 | 148 | 160 | 141 | 145 | 152 | 164 | 146 | 150 | 157 | 169 |

IDB = Entering Indoor Dry Bulb Temperature

Shaded area is AHRI conditions

kW = Total system power

High and low pressures are measured at the liquid and suction service valves.

Amps = outdoor unit amps (comp.+fan)

Airflow may vary depending on actual ambient conditions and system operation modes.

# Expanded Cooling Data — DC6VSS3610A* / DFVE36CP1300A*

| | | | Outdoor Ambient Temperature | | | | | | | | | | | | | | | | | | | | | | | |
|---|---|---|---|---|---|---|---|---|---|---|---|---|---|---|---|---|---|---|---|---|---|---|---|---|---|---|
| | | | 65°F | | | | 75°F | | | | 85°F | | | | 95°F | | | | 105°F | | | | 115°F | | | |
| | | | Entering Indoor Wet Bulb Temperature | | | | | | | | | | | | | | | | | | | | | | | |
| IDB | Airflow | | 59 | 63 | 67 | 71 | 59 | 63 | 67 | 71 | 59 | 63 | 67 | 71 | 59 | 63 | 67 | 71 | 59 | 63 | 67 | 71 | 59 | 63 | 67 | 71 |
| 70 | 1070 | MBh | 30.3 | 34.1 | 39.0 | | 36.0 | 36.5 | 37.6 | | 34.0 | 34.5 | 35.5 | | 31.4 | 31.9 | 32.9 | | 28.6 | 29.1 | 30.1 | | 26.7 | 27.1 | 28.1 | |
| | | S/T | 0.65 | 0.55 | 0.39 | | 0.61 | 0.53 | 0.39 | | 0.63 | 0.56 | 0.42 | | 0.65 | 0.57 | 0.44 | | 0.67 | 0.59 | 0.46 | | 1.00 | 0.66 | 0.52 | |
| | | ΔT | 21 | 20 | 14 | | 19 | 17 | 14 | | 19 | 17 | 14 | | 18 | 16 | 13 | | 17 | 15 | 12 | | 20 | 18 | 15 | |
| | | kW | 1.75 | 1.99 | 2.68 | | 3.03 | 3.03 | 3.03 | | 3.42 | 3.42 | 3.41 | | 3.83 | 3.83 | 3.83 | | 4.30 | 4.29 | 4.29 | | 4.38 | 4.38 | 4.37 | |
| | | Amps | 6.3 | 7.2 | 10.0 | | 11.5 | 11.4 | 11.4 | | 13.1 | 13.1 | 13.0 | | 14.8 | 14.8 | 14.7 | | 16.6 | 16.6 | 16.6 | | 16.9 | 16.9 | 16.9 | |
| | | Hi PR | 282 | 287 | 295 | | 333 | 334 | 336 | | 375 | 376 | 378 | | 420 | 421 | 423 | | 466 | 468 | 469 | | 514 | 515 | 517 | |
| | | Lo PR | 119 | 119 | 121 | | 120 | 123 | 129 | | 127 | 130 | 136 | | 133 | 135 | 142 | | 139 | 141 | 148 | | 147 | 150 | 157 | |
| | 1260 | MBh | 32.5 | 37.5 | 39.6 | | 36.5 | 37.0 | 38.1 | | 34.5 | 35.0 | 36.1 | | 32.0 | 32.5 | 33.5 | | 29.2 | 29.6 | 30.6 | | 27.2 | 27.6 | 28.6 | |
| | | S/T | 0.73 | 0.63 | 0.47 | | 0.69 | 0.61 | 0.47 | | 0.71 | 0.63 | 0.49 | | 0.73 | 0.65 | 0.51 | | 0.75 | 0.67 | 0.53 | | 1.00 | 0.74 | 0.60 | |
| | | ΔT | 20 | 18 | 13 | | 18 | 16 | 13 | | 17 | 16 | 12 | | 16 | 15 | 12 | | 16 | 14 | 11 | | 18 | 17 | 13 | |
| | | kW | 1.89 | 2.27 | 2.70 | | 3.06 | 3.05 | 3.05 | | 3.44 | 3.44 | 3.43 | | 3.86 | 3.85 | 3.85 | | 4.32 | 4.32 | 4.31 | | 4.40 | 4.40 | 4.39 | |
| | | Amps | 6.8 | 8.3 | 10.0 | | 11.6 | 11.5 | 11.5 | | 13.2 | 13.1 | 13.1 | | 14.9 | 14.8 | 14.8 | | 16.7 | 16.7 | 16.7 | | 17.0 | 17.0 | 16.9 | |
| | | Hi PR | 287 | 293 | 298 | | 336 | 337 | 339 | | 378 | 379 | 381 | | 422 | 424 | 426 | | 469 | 470 | 472 | | 517 | 518 | 520 | |
| | | Lo PR | 120 | 119 | 123 | | 122 | 125 | 131 | | 129 | 132 | 138 | | 135 | 138 | 144 | | 141 | 143 | 150 | | 149 | 152 | 159 | |
| | 1450 | MBh | 37.7 | 39.2 | 40.3 | | 37.2 | 37.7 | 38.8 | | 35.2 | 35.7 | 36.8 | | 32.6 | 33.1 | 34.1 | | 29.8 | 30.3 | 31.3 | | 27.8 | 28.3 | 29.2 | |
| | | S/T | 0.75 | 0.64 | 0.50 | | 0.73 | 0.65 | 0.51 | | 0.75 | 0.67 | 0.53 | | 0.77 | 0.69 | 0.55 | | 0.79 | 0.71 | 0.57 | | 1.00 | 0.78 | 0.64 | |
| | | ΔT | 19 | 15 | 12 | | 17 | 15 | 12 | | 16 | 15 | 11 | | 15 | 14 | 11 | | 15 | 13 | 10 | | 17 | 15 | 12 | |
| | | kW | 2.29 | 2.73 | 2.72 | | 3.07 | 3.07 | 3.07 | | 3.46 | 3.46 | 3.45 | | 3.87 | 3.87 | 3.87 | | 4.34 | 4.33 | 4.33 | | 4.41 | 4.41 | 4.41 | |
| | | Amps | 8.4 | 10.2 | 10.1 | | 11.6 | 11.6 | 11.6 | | 13.2 | 13.2 | 13.2 | | 14.9 | 14.9 | 14.9 | | 16.8 | 16.8 | 16.7 | | 17.0 | 17.0 | 17.0 | |
| | | Hi PR | 295 | 299 | 301 | | 339 | 340 | 342 | | 381 | 382 | 384 | | 425 | 426 | 428 | | 472 | 473 | 475 | | 519 | 521 | 522 | |
| | | Lo PR | 119 | 119 | 126 | | 125 | 127 | 133 | | 131 | 134 | 140 | | 137 | 140 | 147 | | 143 | 146 | 153 | | 151 | 154 | 161 | |
| 75 | 1070 | MBh | 30.3 | 34.1 | 39.0 | 40.7 | 36.0 | 36.5 | 37.6 | 39.2 | 34.0 | 34.5 | 35.6 | 37.2 | 31.5 | 31.9 | 33.0 | 34.5 | 28.7 | 29.1 | 30.1 | 31.6 | 26.7 | 27.1 | 28.1 | 29.6 |
| | | S/T | 0.80 | 0.69 | 0.52 | 0.37 | 0.74 | 0.66 | 0.53 | 0.38 | 0.77 | 0.69 | 0.55 | 0.40 | 0.78 | 0.71 | 0.57 | 0.42 | 1.00 | 0.73 | 0.59 | 0.44 | 1.00 | 0.80 | 0.66 | 0.51 |
| | | ΔT | 26 | 24 | 18 | 15 | 23 | 21 | 18 | 14 | 22 | 21 | 17 | 14 | 21 | 20 | 17 | 13 | 20 | 19 | 16 | 13 | 23 | 22 | 18 | 15 |
| | | kW | 1.75 | 1.98 | 2.68 | 2.70 | 3.03 | 3.03 | 3.02 | 3.05 | 3.42 | 3.41 | 3.41 | 3.43 | 3.83 | 3.83 | 3.82 | 3.85 | 4.30 | 4.29 | 4.29 | 4.31 | 4.38 | 4.37 | 4.37 | 4.39 |
| | | Amps | 6.3 | 7.2 | 9.9 | 10.1 | 11.4 | 11.4 | 11.4 | 11.5 | 13.1 | 13.0 | 13.0 | 13.1 | 14.8 | 14.7 | 14.7 | 14.8 | 16.6 | 16.6 | 16.6 | 16.7 | 16.9 | 16.9 | 16.9 | 17.0 |
| | | Hi PR | 282 | 287 | 295 | 300 | 333 | 334 | 336 | 342 | 375 | 377 | 379 | 384 | 420 | 421 | 423 | 428 | 467 | 468 | 470 | 475 | 514 | 515 | 517 | 522 |
| | | Lo PR | 119 | 119 | 121 | 132 | 120 | 123 | 129 | 140 | 127 | 130 | 136 | 147 | 133 | 136 | 142 | 154 | 139 | 141 | 148 | 160 | 147 | 150 | 157 | 169 |
| | 1260 | MBh | 32.5 | 37.5 | 39.6 | 41.3 | 36.5 | 37.1 | 38.1 | 39.8 | 34.6 | 35.1 | 36.1 | 37.7 | 32.0 | **32.5** | 33.5 | 35.1 | 29.2 | 29.6 | 30.6 | 32.2 | 27.2 | 27.7 | 28.6 | 30.1 |
| | | S/T | 0.87 | 0.77 | 0.60 | 0.45 | 0.82 | 0.74 | 0.60 | 0.46 | 0.84 | 0.76 | 0.63 | 0.48 | 1.00 | **0.78** | 0.64 | 0.50 | 1.00 | 0.80 | 0.66 | 0.52 | 1.00 | 0.87 | 0.73 | 0.59 |
| | | ΔT | 24 | 23 | 17 | 14 | 21 | 20 | 16 | 13 | 21 | 19 | 16 | 13 | 20 | **18** | 15 | 12 | 19 | 18 | 15 | 12 | 22 | 20 | 17 | 14 |
| | | kW | 1.88 | 2.27 | 2.70 | 2.73 | 3.05 | 3.05 | 3.05 | 3.07 | 3.44 | 3.44 | 3.43 | 3.46 | 3.85 | **3.85** | 3.85 | 3.87 | 4.32 | 4.31 | 4.31 | 4.34 | 4.40 | 4.39 | 4.39 | 4.41 |
| | | Amps | 6.8 | 8.3 | 10.0 | 10.2 | 11.5 | 11.5 | 11.5 | 11.6 | 13.1 | 13.1 | 13.1 | 13.2 | 14.8 | **14.8** | 14.8 | 14.9 | 16.7 | 16.7 | 16.7 | 16.8 | 17.0 | 17.0 | 16.9 | 17.0 |
| | | Hi PR | 287 | 293 | 298 | 303 | 336 | 337 | 339 | 344 | 378 | 380 | 382 | 387 | 423 | **424** | 426 | 431 | 469 | 471 | 473 | 477 | 517 | 518 | 520 | 525 |
| | | Lo PR | 120 | 119 | 123 | 134 | 122 | 125 | 131 | 142 | 129 | 132 | 138 | 149 | 135 | **138** | 144 | 156 | 141 | 143 | 150 | 162 | 149 | 152 | 159 | 171 |
| | 1450 | MBh | 37.7 | 39.2 | 40.3 | 42.0 | 37.2 | 37.8 | 38.8 | 40.5 | 35.2 | 35.7 | 36.8 | 38.4 | 32.7 | 33.1 | 34.2 | 35.7 | 29.8 | 30.3 | 31.3 | 32.8 | 27.8 | 28.3 | 29.3 | 30.8 |
| | | S/T | 0.89 | 0.78 | 0.64 | 0.49 | 0.86 | 0.78 | 0.64 | 0.50 | 0.88 | 0.80 | 0.67 | 0.52 | 1.00 | 0.82 | 0.68 | 0.54 | 1.00 | 0.84 | 0.70 | 0.56 | 1.00 | 0.91 | 0.77 | 0.63 |
| | | ΔT | 24 | 19 | 16 | 12 | 20 | 19 | 15 | 12 | 20 | 18 | 15 | 12 | 19 | 17 | 14 | 11 | 18 | 17 | 14 | 11 | 21 | 19 | 16 | 13 |
| | | kW | 2.29 | 2.72 | 2.72 | 2.74 | 3.07 | 3.07 | 3.06 | 3.09 | 3.46 | 3.45 | 3.45 | 3.47 | 3.87 | 3.87 | 3.86 | 3.89 | 4.34 | 4.33 | 4.33 | 4.35 | 4.41 | 4.41 | 4.40 | 4.43 |
| | | Amps | 8.4 | 10.1 | 10.1 | 10.2 | 11.6 | 11.6 | 11.6 | 11.7 | 13.2 | 13.2 | 13.2 | 13.3 | 14.9 | 14.9 | 14.9 | 15.0 | 16.8 | 16.7 | 16.7 | 16.8 | 17.0 | 17.0 | 17.0 | 17.1 |
| | | Hi PR | 295 | 299 | 301 | 306 | 339 | 340 | 342 | 347 | 381 | 382 | 384 | 389 | 425 | 427 | 429 | 434 | 472 | 473 | 475 | 480 | 520 | 521 | 523 | 527 |
| | | Lo PR | 119 | 119 | 126 | 136 | 125 | 127 | 133 | 145 | 131 | 134 | 140 | 152 | 137 | 140 | 147 | 158 | 143 | 146 | 153 | 165 | 151 | 154 | 161 | 174 |

IDB = Entering Indoor Dry Bulb Temperature

Shaded area is ACCA (TVA) conditions

kW = Total system power

High and low pressures are measured at the liquid and suction service valves.

Amps = outdoor unit amps (comp.+fan)

Airflow may vary depending on actual ambient conditions and system operation modes.

## Expanded Cooling Data — DC6VSS3610A* / DFVE36CP1300A* (cont.)

| | | | Outdoor Ambient Temperature | | | | | | | | | | | | | | | | | | | | | | | |
|---|---|---|---|---|---|---|---|---|---|---|---|---|---|---|---|---|---|---|---|---|---|---|---|---|---|---|
| | | | 65°F | | | | 75°F | | | | 85°F | | | | 95°F | | | | 105°F | | | | 115°F | | | |
| | | | Entering Indoor Wet Bulb Temperature | | | | | | | | | | | | | | | | | | | | | | | |
| IDB | Airflow | | 59 | 63 | 67 | 71 | 59 | 63 | 67 | 71 | 59 | 63 | 67 | 71 | 59 | 63 | 67 | 71 | 59 | 63 | 67 | 71 | 59 | 63 | 67 | 71 |
| 80 | 1070 | MBh | 30.5 | 34.3 | 39.2 | 40.9 | 36.2 | 36.7 | 37.8 | 39.4 | 34.2 | 34.7 | 35.8 | 37.4 | 31.6 | 32.1 | 33.1 | 34.7 | 28.8 | 29.3 | 30.3 | 31.8 | 26.8 | 27.3 | 28.3 | 29.8 |
| | | S/T | 0.93 | 0.83 | 0.65 | 0.50 | 0.87 | 0.79 | 0.65 | 0.51 | 1.01 | 0.82 | 0.68 | 0.53 | 1.00 | 0.83 | 0.69 | 0.55 | 1.00 | 0.85 | 0.72 | 0.57 | 1.00 | 1.00 | 0.79 | 0.64 |
| | | ΔT | 30 | 28 | 22 | 19 | 26 | 25 | 22 | 18 | 26 | 24 | 21 | 18 | 25 | 23 | 20 | 17 | 24 | 22 | 19 | 16 | 27 | 25 | 22 | 19 |
| | | kW | 1.75 | 1.98 | 2.68 | 2.71 | 3.03 | 3.03 | 3.02 | 3.05 | 3.42 | 3.42 | 3.41 | 3.44 | 3.83 | 3.83 | 3.82 | 3.85 | 4.30 | 4.29 | 4.29 | 4.31 | 4.38 | 4.38 | 4.37 | 4.39 |
| | | Amps | 6.3 | 7.2 | 9.9 | 10.1 | 11.5 | 11.4 | 11.4 | 11.5 | 13.1 | 13.0 | 13.0 | 13.1 | 14.8 | 14.7 | 14.7 | 14.8 | 16.6 | 16.6 | 16.6 | 16.7 | 16.9 | 16.9 | 16.9 | 17.0 |
| | | Hi PR | 283 | 288 | 296 | 301 | 334 | 335 | 337 | 342 | 376 | 377 | 379 | 384 | 420 | 422 | 423 | 428 | 467 | 468 | 470 | 475 | 515 | 516 | 518 | 522 |
| | | Lo PR | 120 | 120 | 122 | 132 | 121 | 123 | 130 | 141 | 128 | 130 | 137 | 148 | 133 | 136 | 143 | 154 | 139 | 142 | 149 | 161 | 147 | 150 | 157 | 169 |
| | 1260 | MBh | 34.3 | 37.7 | 39.8 | 41.5 | 36.7 | 37.2 | 38.3 | 40.0 | 34.7 | 35.2 | 36.3 | 37.9 | 32.2 | 32.7 | **34.2** | 35.2 | 29.4 | 29.8 | 30.8 | 32.3 | 27.4 | 27.8 | 28.8 | 30.3 |
| | | S/T | 0.99 | 0.90 | 0.73 | 0.58 | 1.01 | 0.87 | 0.73 | 0.58 | 1.01 | 0.89 | 0.75 | 0.61 | 1.00 | 0.91 | **0.77** | 0.63 | 1.00 | 0.93 | 0.79 | 0.65 | 1.00 | 1.00 | 0.86 | 0.72 |
| | | ΔT | 29 | 27 | 21 | 18 | 25 | 23 | 20 | 17 | 25 | 23 | 20 | 17 | 24 | 22 | **19** | 16 | 23 | 21 | 18 | 15 | 26 | 24 | 21 | 18 |
| | | kW | 2.00 | 2.27 | 2.70 | 2.73 | 3.06 | 3.05 | 3.05 | 3.07 | 3.44 | 3.44 | 3.43 | 3.46 | 3.86 | 3.85 | **3.80** | 3.87 | 4.32 | 4.32 | 4.31 | 4.34 | 4.40 | 4.39 | 4.39 | 4.41 |
| | | Amps | 7.3 | 8.3 | 10.0 | 10.2 | 11.5 | 11.5 | 11.5 | 11.6 | 13.2 | 13.1 | 13.1 | 13.2 | 14.9 | 14.8 | **14.4** | 14.9 | 16.7 | 16.7 | 16.7 | 16.8 | 17.0 | 17.0 | 16.9 | 17.0 |
| | | Hi PR | 289 | 294 | 299 | 304 | 337 | 338 | 340 | 345 | 379 | 380 | 382 | 387 | 423 | 424 | **426** | 431 | 470 | 471 | 473 | 478 | 517 | 519 | 521 | 525 |
| | | Lo PR | 120 | 120 | 124 | 134 | 123 | 125 | 132 | 143 | 130 | 132 | 139 | 150 | 135 | 138 | **146** | 156 | 141 | 144 | 151 | 163 | 149 | 152 | 159 | 172 |
| | 1450 | MBh | 37.9 | 39.4 | 40.5 | 42.2 | 37.4 | 38.0 | 39.0 | 40.7 | 35.4 | 35.9 | 37.0 | 38.6 | 32.8 | 33.3 | 34.3 | 35.9 | 30.0 | 30.5 | 31.5 | 33.0 | 28.0 | 28.5 | 29.4 | 30.9 |
| | | S/T | 1.01 | 0.90 | 0.77 | 0.62 | 1.01 | 0.91 | 0.77 | 0.62 | 1.01 | 0.93 | 0.79 | 0.65 | 1.00 | 0.95 | 0.81 | 0.67 | 1.00 | 1.00 | 0.83 | 0.69 | 1.00 | 1.00 | 0.90 | 0.76 |
| | | ΔT | 28 | 23 | 20 | 16 | 24 | 22 | 19 | 16 | 24 | 22 | 19 | 16 | 23 | 21 | 18 | 15 | 22 | 20 | 17 | 14 | 25 | 23 | 20 | 17 |
| | | kW | 2.29 | 2.73 | 2.72 | 2.75 | 3.07 | 3.07 | 3.07 | 3.09 | 3.46 | 3.46 | 3.45 | 3.48 | 3.87 | 3.87 | 3.87 | 3.89 | 4.34 | 4.33 | 4.33 | 4.35 | 4.41 | 4.41 | 4.41 | 4.43 |
| | | Amps | 8.4 | 10.2 | 10.1 | 10.2 | 11.6 | 11.6 | 11.6 | 11.7 | 13.2 | 13.2 | 13.2 | 13.3 | 14.9 | 14.9 | 14.9 | 15.0 | 16.8 | 16.8 | 16.7 | 16.8 | 17.0 | 17.0 | 17.0 | 17.1 |
| | | Hi PR | 296 | 300 | 302 | 307 | 340 | 341 | 343 | 348 | 382 | 383 | 385 | 390 | 426 | 427 | 429 | 434 | 473 | 474 | 476 | 481 | 520 | 521 | 523 | 528 |
| | | Lo PR | 120 | 120 | 126 | 137 | 125 | 128 | 134 | 145 | 132 | 134 | 141 | 152 | 138 | 140 | 147 | 159 | 144 | 146 | 153 | 165 | 152 | 154 | 162 | 174 |
| 85 | 1070 | MBh | 34.4 | 37.8 | 39.8 | 41.5 | 36.8 | 37.3 | 38.4 | 40.0 | 34.8 | 35.3 | 36.3 | 38.0 | 32.2 | 32.7 | 33.7 | 35.3 | 29.4 | 29.9 | 30.9 | 32.4 | 27.4 | 27.9 | 28.8 | 30.3 |
| | | S/T | 1.01 | 0.93 | 0.75 | 0.61 | 1.01 | 0.90 | 0.76 | 0.61 | 1.01 | 0.92 | 0.78 | 0.63 | 1.00 | 1.00 | 0.80 | 0.65 | 1.00 | 1.00 | 0.82 | 0.67 | 1.00 | 1.00 | 1.00 | 0.74 |
| | | ΔT | 34 | 33 | 26 | 22 | 30 | 28 | 25 | 22 | 29 | 28 | 24 | 21 | 28 | 26 | 23 | 20 | 27 | 25 | 22 | 19 | 30 | 29 | 26 | 22 |
| | | kW | 1.99 | 2.26 | 2.69 | 2.71 | 3.04 | 3.04 | 3.03 | 3.06 | 3.42 | 3.42 | 3.42 | 3.44 | 3.84 | 3.84 | 3.83 | 3.86 | 4.30 | 4.30 | 4.29 | 4.32 | 4.38 | 4.38 | 4.38 | 4.40 |
| | | Amps | 7.2 | 8.2 | 10.0 | 10.1 | 11.5 | 11.5 | 11.4 | 11.6 | 13.1 | 13.1 | 13.1 | 13.2 | 14.8 | 14.8 | 14.8 | 14.9 | 16.6 | 16.6 | 16.6 | 16.7 | 16.9 | 16.9 | 16.9 | 17.0 |
| | | Hi PR | 288 | 292 | 297 | 302 | 335 | 336 | 338 | 343 | 377 | 378 | 380 | 385 | 422 | 423 | 425 | 430 | 468 | 470 | 472 | 476 | 516 | 517 | 519 | 524 |
| | | Lo PR | 119 | 120 | 124 | 134 | 123 | 125 | 131 | 142 | 129 | 132 | 138 | 150 | 135 | 138 | 144 | 156 | 141 | 144 | 151 | 162 | 149 | 152 | 159 | 171 |
| | 1260 | MBh | 37.8 | 39.3 | 40.4 | 42.1 | 37.3 | 37.9 | 38.9 | 40.6 | 35.3 | 35.8 | 36.9 | 38.5 | 32.7 | 33.2 | 34.3 | 35.8 | 29.9 | 30.4 | 31.4 | 32.9 | 27.9 | 28.4 | 29.4 | 30.9 |
| | | S/T | 1.01 | 0.97 | 0.83 | 0.68 | 1.01 | 0.97 | 0.83 | 0.69 | 1.01 | 1.00 | 0.86 | 0.71 | 1.00 | 1.00 | 0.87 | 0.73 | 1.00 | 1.00 | 0.89 | 0.75 | 1.00 | 1.00 | 1.00 | 0.82 |
| | | ΔT | 33 | 28 | 24 | 21 | 29 | 27 | 24 | 20 | 28 | 26 | 23 | 20 | 27 | 25 | 22 | 19 | 26 | 24 | 21 | 18 | 29 | 27 | 24 | 21 |
| | | kW | 2.28 | 2.71 | 2.71 | 2.74 | 3.06 | 3.06 | 3.05 | 3.08 | 3.45 | 3.44 | 3.44 | 3.47 | 3.86 | 3.86 | 3.85 | 3.88 | 4.33 | 4.32 | 4.32 | 4.34 | 4.40 | 4.40 | 4.40 | 4.42 |
| | | Amps | 8.3 | 10.1 | 10.1 | 10.2 | 11.6 | 11.6 | 11.5 | 11.7 | 13.2 | 13.2 | 13.1 | 13.3 | 14.9 | 14.9 | 14.8 | 15.0 | 16.7 | 16.7 | 16.7 | 16.8 | 17.0 | 17.0 | 17.0 | 17.1 |
| | | Hi PR | 294 | 298 | 300 | 305 | 338 | 339 | 341 | 346 | 380 | 381 | 383 | 388 | 425 | 426 | 428 | 433 | 471 | 472 | 474 | 479 | 519 | 520 | 522 | 527 |
| | | Lo PR | 119 | 119 | 126 | 136 | 125 | 127 | 133 | 145 | 131 | 134 | 140 | 152 | 137 | 140 | 147 | 158 | 143 | 146 | 153 | 165 | 151 | 154 | 161 | 174 |
| | 1450 | MBh | 39.5 | 40.0 | 41.1 | 42.8 | 38.1 | 38.6 | 39.7 | 41.3 | 36.0 | 36.5 | 37.6 | 39.2 | 33.4 | 33.9 | 34.9 | 36.5 | 30.6 | 31.0 | 32.0 | 33.5 | 28.5 | 29.0 | 30.0 | 31.5 |
| | | S/T | 1.01 | 1.01 | 0.87 | 0.72 | 1.01 | 1.01 | 0.87 | 0.73 | 1.01 | 1.01 | 0.90 | 0.75 | 1.00 | 1.00 | 0.91 | 0.77 | 1.00 | 1.00 | 0.93 | 0.79 | 1.00 | 1.00 | 1.00 | 0.86 |
| | | ΔT | 28 | 27 | 23 | 20 | 28 | 26 | 23 | 19 | 27 | 25 | 22 | 19 | 26 | 24 | 21 | 18 | 25 | 23 | 20 | 17 | 28 | 26 | 23 | 20 |
| | | kW | 2.74 | 2.73 | 2.73 | 2.75 | 3.08 | 3.08 | 3.07 | 3.10 | 3.47 | 3.46 | 3.46 | 3.48 | 3.88 | 3.88 | 3.87 | 3.90 | 4.34 | 4.34 | 4.33 | 4.36 | 4.42 | 4.42 | 4.41 | 4.44 |
| | | Amps | 10.2 | 10.2 | 10.2 | 10.3 | 11.7 | 11.6 | 11.6 | 11.7 | 13.3 | 13.2 | 13.2 | 13.3 | 15.0 | 14.9 | 14.9 | 15.0 | 16.8 | 16.8 | 16.8 | 16.9 | 17.1 | 17.1 | 17.0 | 17.1 |
| | | Hi PR | 300 | 301 | 303 | 308 | 341 | 342 | 344 | 349 | 383 | 384 | 386 | 391 | 427 | 428 | 430 | 435 | 474 | 475 | 477 | 482 | 521 | 523 | 525 | 529 |
| | | Lo PR | 119 | 122 | 128 | 139 | 127 | 129 | 136 | 147 | 134 | 136 | 143 | 154 | 139 | 142 | 149 | 161 | 145 | 148 | 155 | 167 | 154 | 156 | 163 | 176 |

IDB = Entering Indoor Dry Bulb Temperature

Shaded area is AHRI conditions

kW = Total system power

High and low pressures are measured at the liquid and suction service valves.

Amps = outdoor unit amps (comp.+fan)

Airflow may vary depending on actual ambient conditions and system operation modes.

# Expanded Cooling Data — DC6VSS4210A* / DFVE48DP1300A*

| | | | Outdoor Ambient Temperature | | | | | | | | | | | | | | | | | | | | | | | |
|---|---|---|---|---|---|---|---|---|---|---|---|---|---|---|---|---|---|---|---|---|---|---|---|---|---|---|
| | | | 65°F | | | | 75°F | | | | 85°F | | | | 95°F | | | | 105°F | | | | 115°F | | | |
| | | | Entering Indoor Wet Bulb Temperature | | | | | | | | | | | | | | | | | | | | | | | |
| IDB | Airflow | | 59 | 63 | 67 | 71 | 59 | 63 | 67 | 71 | 59 | 63 | 67 | 71 | 59 | 63 | 67 | 71 | 59 | 63 | 67 | 71 | 59 | 63 | 67 | 71 |
| 70 | 1120 | MBh | 33.5 | 42.3 | 43.6 | | 41.3 | 41.9 | 43.1 | | 40.1 | 40.7 | 41.9 | | 38.1 | 38.7 | 40.0 | | 35.8 | 36.3 | 37.6 | | 29.5 | 30.0 | 31.1 | |
| | | S/T | 0.59 | 0.50 | 0.37 | | 0.58 | 0.50 | 0.37 | | 0.60 | 0.53 | 0.40 | | 0.62 | 0.54 | 0.41 | | 0.64 | 0.56 | 0.43 | | 0.70 | 0.62 | 0.49 | |
| | | ΔT | 21 | 19 | 15 | | 20 | 19 | 15 | | 21 | 19 | 15 | | 20 | 18 | 15 | | 20 | 18 | 15 | | 22 | 20 | 16 | |
| | | kW | 1.66 | 3.32 | 3.31 | | 3.70 | 3.70 | 3.69 | | 4.11 | 4.10 | 4.09 | | 4.53 | 4.53 | 4.52 | | 4.99 | 4.99 | 4.98 | | 3.11 | 3.11 | 3.10 | |
| | | Amps | 8.2 | 14.7 | 14.7 | | 15.9 | 15.8 | 15.8 | | 16.9 | 16.9 | 16.8 | | 17.7 | 17.7 | 17.7 | | 18.5 | 18.5 | 18.4 | | 11.1 | 11.1 | 11.0 | |
| | | Hi PR | 261 | 280 | 282 | | 324 | 325 | 327 | | 371 | 372 | 374 | | 422 | 423 | 425 | | 477 | 478 | 480 | | 514 | 515 | 517 | |
| | | Lo PR | 119 | 119 | 127 | | 120 | 125 | 133 | | 124 | 129 | 137 | | 127 | 132 | 140 | | 130 | 136 | 144 | | 138 | 144 | 152 | |
| | 1320 | MBh | 37.8 | 43.0 | 44.2 | | 41.9 | 42.5 | 43.8 | | 40.7 | 41.3 | 42.6 | | 38.8 | 39.4 | 40.6 | | 36.4 | 37.0 | 38.2 | | 30.1 | 30.6 | 31.7 | |
| | | S/T | 0.65 | 0.57 | 0.44 | | 0.65 | 0.58 | 0.45 | | 0.67 | 0.60 | 0.47 | | 0.69 | 0.62 | 0.49 | | 0.71 | 0.64 | 0.51 | | 0.77 | 0.70 | 0.57 | |
| | | ΔT | 20 | 17 | 14 | | 19 | 17 | 14 | | 19 | 17 | 14 | | 19 | 17 | 14 | | 19 | 17 | 13 | | 20 | 19 | 15 | |
| | | kW | 1.99 | 3.35 | 3.34 | | 3.73 | 3.72 | 3.72 | | 4.13 | 4.13 | 4.12 | | 4.56 | 4.55 | 4.55 | | 5.02 | 5.01 | 5.01 | | 3.12 | 3.12 | 3.12 | |
| | | Amps | 9.4 | 14.9 | 14.9 | | 16.0 | 16.0 | 15.9 | | 17.0 | 17.0 | 17.0 | | 17.9 | 17.8 | 17.8 | | 18.6 | 18.6 | 18.5 | | 11.1 | 11.1 | 11.1 | |
| | | Hi PR | 271 | 283 | 285 | | 327 | 328 | 330 | | 374 | 375 | 377 | | 425 | 426 | 428 | | 480 | 481 | 483 | | 517 | 518 | 520 | |
| | | Lo PR | 120 | 121 | 129 | | 122 | 127 | 135 | | 126 | 131 | 139 | | 129 | 134 | 142 | | 132 | 137 | 146 | | 140 | 146 | 154 | |
| | 1520 | MBh | 42.9 | 43.8 | 45.0 | | 42.7 | 43.3 | 44.6 | | 41.5 | 42.1 | 43.4 | | 39.6 | 40.2 | 41.4 | | 37.2 | 37.8 | 39.0 | | 30.8 | 31.3 | 32.4 | |
| | | S/T | 0.67 | 0.61 | 0.48 | | 0.69 | 0.61 | 0.48 | | 0.71 | 0.64 | 0.51 | | 0.73 | 0.65 | 0.52 | | 0.75 | 0.67 | 0.54 | | 0.81 | 0.73 | 0.60 | |
| | | ΔT | 19 | 16 | 13 | | 18 | 16 | 13 | | 18 | 16 | 13 | | 18 | 16 | 12 | | 17 | 16 | 12 | | 19 | 17 | 14 | |
| | | kW | 2.42 | 3.37 | 3.37 | | 3.75 | 3.75 | 3.74 | | 4.16 | 4.15 | 4.15 | | 4.58 | 4.58 | 4.57 | | 5.04 | 5.04 | 5.03 | | 3.13 | 3.13 | 3.13 | |
| | | Amps | 10.9 | 15.0 | 15.0 | | 16.1 | 16.1 | 16.0 | | 17.1 | 17.1 | 17.1 | | 17.9 | 17.9 | 17.9 | | 18.7 | 18.6 | 18.6 | | 11.2 | 11.1 | 11.1 | |
| | | Hi PR | 283 | 286 | 288 | | 330 | 331 | 333 | | 377 | 378 | 380 | | 428 | 429 | 431 | | 483 | 484 | 486 | | 519 | 521 | 522 | |
| | | Lo PR | 120 | 124 | 131 | | 124 | 129 | 137 | | 128 | 133 | 142 | | 131 | 137 | 145 | | 134 | 140 | 148 | | 142 | 148 | 157 | |
| 75 | 1120 | MBh | 33.5 | 42.4 | 43.6 | 45.5 | 41.3 | 41.9 | 43.1 | 45.0 | 40.1 | 40.7 | 41.9 | 43.8 | 38.2 | 38.7 | 40.0 | 41.9 | 35.8 | 36.4 | 37.6 | 39.5 | 29.6 | 30.1 | 31.2 | 32.8 |
| | | S/T | 0.72 | 0.62 | 0.49 | 0.35 | 0.70 | 0.63 | 0.50 | 0.36 | 0.72 | 0.65 | 0.52 | 0.38 | 0.74 | 0.67 | 0.54 | 0.40 | 0.76 | 0.69 | 0.56 | 0.42 | 1.00 | 0.75 | 0.62 | 0.48 |
| | | ΔT | 25 | 23 | 19 | 16 | 25 | 23 | 19 | 16 | 25 | 23 | 19 | 16 | 24 | 22 | 19 | 15 | 24 | 22 | 19 | 15 | 26 | 24 | 21 | 17 |
| | | kW | 1.66 | 3.32 | 3.31 | 3.34 | 3.70 | 3.69 | 3.69 | 3.72 | 4.10 | 4.10 | 4.09 | 4.13 | 4.53 | 4.52 | 4.52 | 4.55 | 4.99 | 4.98 | 4.98 | 5.01 | 3.11 | 3.10 | 3.10 | 3.12 |
| | | Amps | 8.2 | 14.7 | 14.7 | 14.9 | 15.8 | 15.8 | 15.8 | 16.0 | 16.9 | 16.9 | 16.8 | 17.0 | 17.7 | 17.7 | 17.7 | 17.8 | 18.5 | 18.5 | 18.4 | 18.5 | 11.1 | 11.1 | 11.0 | 11.0 |
| | | Hi PR | 261 | 281 | 282 | 287 | 324 | 325 | 327 | 332 | 371 | 373 | 374 | 379 | 422 | 423 | 425 | 430 | 477 | 479 | 481 | 485 | 514 | 515 | 517 | 522 |
| | | Lo PR | 119 | 119 | 127 | 138 | 120 | 125 | 133 | 144 | 124 | 129 | 137 | 148 | 127 | 133 | 140 | 152 | 130 | 136 | 144 | 155 | 138 | 144 | 152 | 164 |
| | 1320 | MBh | 37.8 | 43.0 | 44.3 | 46.2 | 41.9 | 42.5 | 43.8 | 45.7 | 40.8 | 41.3 | 42.6 | 44.5 | 38.8 | **39.4** | 40.6 | 42.5 | 36.4 | 37.0 | 38.2 | 40.1 | 30.1 | 30.6 | 31.7 | 33.4 |
| | | S/T | 0.78 | 0.70 | 0.57 | 0.43 | 0.78 | 0.70 | 0.57 | 0.43 | 0.80 | 0.72 | 0.59 | 0.46 | 0.81 | **0.74** | 0.61 | 0.47 | 0.83 | 0.76 | 0.63 | 0.49 | 1.00 | 0.82 | 0.69 | 0.55 |
| | | ΔT | 24 | 21 | 18 | 14 | 23 | 21 | 18 | 14 | 23 | 21 | 18 | 14 | 23 | **21** | 18 | 14 | 23 | 21 | 17 | 14 | 25 | 23 | 19 | 15 |
| | | kW | 1.99 | 3.35 | 3.34 | 3.37 | 3.72 | 3.72 | 3.71 | 3.75 | 4.13 | 4.13 | 4.12 | 4.15 | 4.55 | **4.55** | 4.54 | 4.58 | 5.01 | 5.01 | 5.00 | 5.04 | 3.12 | 3.12 | 3.11 | 3.13 |
| | | Amps | 9.4 | 14.9 | 14.8 | 15.0 | 16.0 | 16.0 | 15.9 | 16.1 | 17.0 | 17.0 | 16.9 | 17.1 | 17.8 | **17.8** | 17.8 | 17.9 | 18.6 | 18.6 | 18.5 | 18.6 | 11.1 | 11.1 | 11.1 | 11.0 |
| | | Hi PR | 272 | 283 | 285 | 290 | 327 | 328 | 330 | 335 | 374 | 375 | 377 | 382 | 425 | **426** | 428 | 433 | 480 | 481 | 483 | 488 | 517 | 518 | 520 | 525 |
| | | Lo PR | 120 | 121 | 129 | 140 | 122 | 127 | 135 | 146 | 126 | 131 | 139 | 151 | 129 | **134** | 143 | 154 | 132 | 138 | 146 | 157 | 140 | 146 | 154 | 166 |
| | 1520 | MBh | 42.9 | 43.8 | 45.1 | 47.0 | 42.8 | 43.3 | 44.6 | 46.5 | 41.6 | 42.1 | 43.4 | 45.3 | 39.6 | 40.2 | 41.4 | 43.3 | 37.2 | 37.8 | 39.0 | 40.9 | 30.8 | 31.3 | 32.4 | 34.1 |
| | | S/T | 0.80 | 0.73 | 0.60 | 0.46 | 0.81 | 0.74 | 0.61 | 0.47 | 0.83 | 0.76 | 0.63 | 0.49 | 0.85 | 0.78 | 0.65 | 0.51 | 1.00 | 0.80 | 0.67 | 0.53 | 1.00 | 0.86 | 0.73 | 0.59 |
| | | ΔT | 24 | 20 | 17 | 13 | 22 | 20 | 17 | 13 | 22 | 20 | 17 | 13 | 22 | 20 | 16 | 13 | 21 | 20 | 16 | 13 | 24 | 22 | 18 | 14 |
| | | kW | 2.41 | 3.37 | 3.36 | 3.40 | 3.75 | 3.74 | 3.74 | 3.77 | 4.15 | 4.15 | 4.14 | 4.18 | 4.58 | 4.57 | 4.57 | 4.60 | 5.04 | 5.03 | 5.03 | 5.06 | 3.13 | 3.13 | 3.13 | 3.14 |
| | | Amps | 10.9 | 15.0 | 15.0 | 15.1 | 16.1 | 16.1 | 16.0 | 16.2 | 17.1 | 17.1 | 17.0 | 17.2 | 17.9 | 17.9 | 17.9 | 18.0 | 18.6 | 18.6 | 18.6 | 18.7 | 11.1 | 11.1 | 11.1 | 11.0 |
| | | Hi PR | 283 | 286 | 288 | 293 | 330 | 331 | 333 | 338 | 377 | 378 | 380 | 385 | 428 | 429 | 431 | 436 | 483 | 484 | 486 | 491 | 520 | 521 | 523 | 527 |
| | | Lo PR | 120 | 124 | 132 | 143 | 124 | 129 | 137 | 148 | 128 | 133 | 142 | 153 | 131 | 137 | 145 | 156 | 134 | 140 | 148 | 160 | 142 | 148 | 157 | 169 |

IDB = Entering Indoor Dry Bulb Temperature

Shaded area is ACCA (TVA) conditions

kW = Total system power

High and low pressures are measured at the liquid and suction service valves.

Amps = outdoor unit amps (comp.+fan)

Airflow may vary depending on actual ambient conditions and system operation modes.

| | | | Outdoor Ambient Temperature | | | | | | | | | | | | | | | | | | | | | | | |
|---|---|---|---|---|---|---|---|---|---|---|---|---|---|---|---|---|---|---|---|---|---|---|---|---|---|---|
| | | | 65°F | | | | 75°F | | | | 85°F | | | | 95°F | | | | 105°F | | | | 115°F | | | |
| | | | Entering Indoor Wet Bulb Temperature | | | | | | | | | | | | | | | | | | | | | | | |
| IDB | Airflow | | 59 | 63 | 67 | 71 | 59 | 63 | 67 | 71 | 59 | 63 | 67 | 71 | 59 | 63 | 67 | 71 | 59 | 63 | 67 | 71 | 59 | 63 | 67 | 71 |
| 80 | 1120 | MBh | 34.9 | 42.6 | 43.8 | 45.7 | 41.5 | 42.1 | 43.4 | 45.3 | 40.3 | 40.9 | 42.2 | 44.1 | 38.4 | 39.0 | 40.2 | 42.1 | 36.0 | 36.6 | 37.8 | 39.7 | 29.7 | 30.3 | 31.3 | 33.0 |
| | | S/T | 0.84 | 0.75 | 0.61 | 0.48 | 0.82 | 0.75 | 0.62 | 0.48 | 1.00 | 0.77 | 0.64 | 0.50 | 1.00 | 0.79 | 0.66 | 0.52 | 1.00 | 0.81 | 0.68 | 0.54 | 1.00 | 0.87 | 0.74 | 0.60 |
| | | ΔT | 30 | 27 | 23 | 20 | 29 | 27 | 23 | 20 | 29 | 27 | 23 | 20 | 28 | 27 | 23 | 20 | 28 | 26 | 23 | 19 | 30 | 28 | 25 | 21 |
| | | kW | 1.76 | 3.32 | 3.31 | 3.35 | 3.70 | 3.70 | 3.69 | 3.72 | 4.11 | 4.10 | 4.09 | 4.13 | 4.53 | 4.53 | 4.52 | 4.55 | 4.99 | 4.99 | 4.98 | 5.01 | 3.11 | 3.11 | 3.10 | 3.12 |
| | | Amps | 8.6 | 14.7 | 14.7 | 14.9 | 15.9 | 15.8 | 15.8 | 16.0 | 16.9 | 16.9 | 16.8 | 17.0 | 17.7 | 17.7 | 17.7 | 17.8 | 18.5 | 18.5 | 18.4 | 18.6 | 11.1 | 11.1 | 11.0 | 11.0 |
| | | Hi PR | 264 | 281 | 283 | 288 | 325 | 326 | 328 | 333 | 372 | 373 | 375 | 380 | 423 | 424 | 426 | 431 | 478 | 479 | 481 | 486 | 515 | 516 | 518 | 522 |
| | | Lo PR | 119 | 120 | 127 | 138 | 120 | 125 | 133 | 144 | 124 | 130 | 138 | 149 | 128 | 133 | 141 | 152 | 131 | 136 | 144 | 156 | 139 | 144 | 153 | 165 |
| | 1320 | MBh | 38.0 | 43.2 | 44.5 | 46.4 | 42.2 | 42.8 | 44.0 | 45.9 | 41.0 | 41.6 | 42.8 | 44.7 | 39.0 | 39.6 | **41.0** | 42.7 | 36.6 | 37.2 | 38.5 | 40.4 | 30.3 | 30.8 | 31.9 | 33.6 |
| | | S/T | 0.90 | 0.82 | 0.69 | 0.55 | 0.90 | 0.82 | 0.69 | 0.55 | 1.00 | 0.85 | 0.71 | 0.58 | 1.00 | 0.86 | **0.73** | 0.59 | 1.00 | 0.88 | 0.75 | 0.61 | 1.00 | 1.00 | 0.81 | 0.67 |
| | | ΔT | 29 | 26 | 22 | 18 | 27 | 25 | 22 | 18 | 27 | 26 | 22 | 18 | 27 | 25 | **22** | 18 | 27 | 25 | 21 | 18 | 29 | 27 | 23 | 20 |
| | | kW | 1.99 | 3.35 | 3.34 | 3.38 | 3.73 | 3.72 | 3.72 | 3.75 | 4.13 | 4.13 | 4.12 | 4.16 | 4.56 | 4.55 | **4.56** | 4.58 | 5.02 | 5.01 | 5.01 | 5.04 | 3.12 | 3.12 | 3.12 | 3.13 |
| | | Amps | 9.4 | 14.9 | 14.8 | 15.0 | 16.0 | 16.0 | 15.9 | 16.1 | 17.0 | 17.0 | 17.0 | 17.1 | 17.9 | 17.8 | **18.8** | 17.9 | 18.6 | 18.6 | 18.5 | 18.7 | 11.1 | 11.1 | 11.1 | 11.0 |
| | | Hi PR | 272 | 284 | 286 | 291 | 328 | 329 | 331 | 336 | 375 | 376 | 378 | 383 | 426 | 427 | **429** | 434 | 481 | 482 | 484 | 489 | 517 | 519 | 520 | 525 |
| | | Lo PR | 120 | 122 | 130 | 141 | 122 | 127 | 135 | 147 | 126 | 132 | 140 | 151 | 130 | 135 | **145** | 155 | 133 | 138 | 146 | 158 | 141 | 146 | 155 | 167 |
| | 1520 | MBh | 43.4 | 44.0 | 45.3 | 47.2 | 43.0 | 43.6 | 44.8 | 46.7 | 41.8 | 42.4 | 43.6 | 45.5 | 39.8 | 40.4 | 41.6 | 43.5 | 37.4 | 38.0 | 39.3 | 41.2 | 31.0 | 31.5 | 32.6 | 34.3 |
| | | S/T | 0.93 | 0.86 | 0.72 | 0.59 | 1.01 | 0.86 | 0.73 | 0.59 | 1.00 | 0.88 | 0.75 | 0.61 | 1.00 | 0.90 | 0.77 | 0.63 | 1.00 | 0.92 | 0.79 | 0.65 | 1.00 | 1.00 | 0.85 | 0.71 |
| | | ΔT | 26 | 24 | 21 | 17 | 26 | 24 | 21 | 17 | 26 | 24 | 21 | 17 | 26 | 24 | 21 | 17 | 26 | 24 | 20 | 17 | 28 | 26 | 22 | 19 |
| | | kW | 3.38 | 3.37 | 3.36 | 3.40 | 3.75 | 3.75 | 3.74 | 3.77 | 4.16 | 4.15 | 4.14 | 4.18 | 4.58 | 4.58 | 4.57 | 4.60 | 5.04 | 5.03 | 5.03 | 5.06 | 3.13 | 3.13 | 3.13 | 3.14 |
| | | Amps | 15.0 | 15.0 | 15.0 | 15.1 | 16.1 | 16.1 | 16.0 | 16.2 | 17.1 | 17.1 | 17.1 | 17.2 | 17.9 | 17.9 | 17.9 | 18.0 | 18.7 | 18.6 | 18.6 | 18.7 | 11.2 | 11.1 | 11.1 | 11.0 |
| | | Hi PR | 285 | 287 | 289 | 294 | 330 | 332 | 333 | 338 | 377 | 379 | 381 | 386 | 428 | 430 | 432 | 437 | 484 | 485 | 487 | 492 | 520 | 521 | 523 | 528 |
| | | Lo PR | 119 | 124 | 132 | 143 | 124 | 130 | 138 | 149 | 129 | 134 | 142 | 154 | 132 | 137 | 145 | 157 | 135 | 140 | 148 | 160 | 143 | 149 | 157 | 169 |
| 85 | 1120 | MBh | 38.1 | 43.3 | 44.5 | 46.4 | 42.2 | 42.8 | 44.1 | 46.0 | 41.0 | 41.6 | 42.9 | 44.8 | 39.1 | 39.7 | 40.9 | 42.8 | 36.7 | 37.3 | 38.5 | 40.4 | 30.4 | 30.9 | 32.0 | 33.6 |
| | | S/T | 1.01 | 0.84 | 0.71 | 0.57 | 1.01 | 0.85 | 0.72 | 0.58 | 1.00 | 0.87 | 0.74 | 0.60 | 1.00 | 0.89 | 0.76 | 0.62 | 1.00 | 1.00 | 0.78 | 0.64 | 1.00 | 1.00 | 0.84 | 0.70 |
| | | ΔT | 34 | 31 | 27 | 23 | 32 | 30 | 27 | 23 | 32 | 31 | 27 | 24 | 32 | 30 | 27 | 23 | 32 | 30 | 26 | 23 | 34 | 32 | 29 | 25 |
| | | kW | 1.98 | 3.33 | 3.32 | 3.36 | 3.71 | 3.70 | 3.70 | 3.73 | 4.11 | 4.11 | 4.10 | 4.14 | 4.54 | 4.53 | 4.53 | 4.56 | 5.00 | 4.99 | 4.99 | 5.02 | 3.11 | 3.11 | 3.11 | 3.12 |
| | | Amps | 9.3 | 14.8 | 14.7 | 14.9 | 15.9 | 15.9 | 15.8 | 16.0 | 16.9 | 16.9 | 16.9 | 17.0 | 17.8 | 17.8 | 17.7 | 17.9 | 18.5 | 18.5 | 18.5 | 18.6 | 11.1 | 11.1 | 11.1 | 11.0 |
| | | Hi PR | 271 | 282 | 284 | 289 | 326 | 327 | 329 | 334 | 373 | 374 | 376 | 381 | 424 | 425 | 427 | 432 | 479 | 480 | 482 | 487 | 516 | 517 | 519 | 524 |
| | | Lo PR | 120 | 122 | 129 | 140 | 122 | 127 | 135 | 146 | 126 | 131 | 139 | 151 | 129 | 135 | 143 | 154 | 132 | 138 | 146 | 157 | 141 | 146 | 155 | 167 |
| | 1320 | MBh | 43.0 | 43.9 | 45.2 | 47.1 | 42.9 | 43.5 | 44.7 | 46.6 | 41.7 | 42.3 | 43.5 | 45.4 | 39.7 | 40.3 | 41.5 | 43.4 | 37.3 | 37.9 | 39.2 | 41.1 | 30.9 | 31.4 | 32.5 | 34.2 |
| | | S/T | 1.01 | 0.92 | 0.79 | 0.65 | 1.01 | 0.92 | 0.79 | 0.65 | 1.00 | 0.94 | 0.81 | 0.67 | 1.00 | 1.00 | 0.83 | 0.69 | 1.00 | 1.00 | 0.85 | 0.71 | 1.00 | 1.00 | 0.91 | 0.77 |
| | | ΔT | 33 | 29 | 26 | 22 | 31 | 29 | 26 | 22 | 31 | 29 | 26 | 22 | 31 | 29 | 25 | 22 | 30 | 28 | 25 | 21 | 34 | 32 | 28 | 24 |
| | | kW | 2.40 | 3.36 | 3.35 | 3.38 | 3.74 | 3.73 | 3.72 | 3.76 | 4.14 | 4.14 | 4.13 | 4.16 | 4.56 | 4.56 | 4.55 | 4.59 | 5.02 | 5.02 | 5.01 | 5.05 | 3.13 | 3.12 | 3.12 | 3.14 |
| | | Amps | 10.9 | 14.9 | 14.9 | 15.1 | 16.0 | 16.0 | 16.0 | 16.1 | 17.0 | 17.0 | 17.0 | 17.1 | 17.9 | 17.9 | 17.8 | 18.0 | 18.6 | 18.6 | 18.6 | 18.7 | 11.1 | 11.1 | 11.1 | 11.0 |
| | | Hi PR | 282 | 285 | 287 | 292 | 329 | 330 | 332 | 337 | 376 | 377 | 379 | 384 | 427 | 428 | 430 | 435 | 482 | 483 | 485 | 490 | 519 | 520 | 522 | 526 |
| | | Lo PR | 120 | 124 | 131 | 143 | 124 | 129 | 137 | 148 | 128 | 133 | 141 | 153 | 131 | 137 | 145 | 156 | 134 | 140 | 148 | 159 | 140 | 145 | 154 | 167 |
| | 1520 | MBh | 44.1 | 44.7 | 46.0 | 47.9 | 43.7 | 44.3 | 45.5 | 47.4 | 42.5 | 43.1 | 44.3 | 46.2 | 40.5 | 41.1 | 42.3 | 44.2 | 38.1 | 38.7 | 40.0 | 41.9 | 31.6 | 32.1 | 33.2 | 34.9 |
| | | S/T | 1.01 | 0.95 | 0.82 | 0.68 | 1.01 | 0.96 | 0.83 | 0.69 | 1.00 | 1.00 | 0.85 | 0.71 | 1.00 | 1.00 | 0.87 | 0.73 | 1.00 | 1.00 | 0.88 | 0.75 | 1.00 | 1.00 | 1.00 | 0.81 |
| | | ΔT | 30 | 28 | 25 | 21 | 30 | 28 | 24 | 21 | 30 | 28 | 25 | 21 | 30 | 28 | 24 | 21 | 29 | 27 | 24 | 20 | 32 | 30 | 26 | 22 |
| | | kW | 3.38 | 3.38 | 3.37 | 3.41 | 3.76 | 3.75 | 3.75 | 3.78 | 4.16 | 4.16 | 4.15 | 4.19 | 4.59 | 4.58 | 4.58 | 4.61 | 5.05 | 5.04 | 5.04 | 5.07 | 3.14 | 3.14 | 3.13 | 3.15 |
| | | Amps | 15.1 | 15.0 | 15.0 | 15.2 | 16.1 | 16.1 | 16.1 | 16.2 | 17.1 | 17.1 | 17.1 | 17.2 | 18.0 | 18.0 | 17.9 | 18.1 | 18.7 | 18.7 | 18.6 | 18.8 | 11.2 | 11.2 | 11.1 | 11.0 |
| | | Hi PR | 287 | 288 | 290 | 295 | 332 | 333 | 335 | 340 | 379 | 380 | 382 | 387 | 430 | 431 | 433 | 438 | 485 | 486 | 488 | 493 | 521 | 523 | 524 | 529 |
| | | Lo PR | 121 | 126 | 134 | 145 | 126 | 131 | 139 | 151 | 130 | 136 | 144 | 155 | 133 | 139 | 147 | 159 | 136 | 142 | 150 | 162 | 145 | 150 | 159 | 171 |

IDB = Entering Indoor Dry Bulb Temperature

Shaded area is AHRI conditions

kW = Total system power

High and low pressures are measured at the liquid and suction service valves.

Amps = outdoor unit amps (comp.+fan)

Airflow may vary depending on actual ambient conditions and system operation modes.

# Expanded Cooling Data — DC6VSS4810A* / DFVE48DP1300A*

| | | | Outdoor Ambient Temperature | | | | | | | | | | | | | | | | | | | | | | | |
|---|---|---|---|---|---|---|---|---|---|---|---|---|---|---|---|---|---|---|---|---|---|---|---|---|---|---|
| | | | 65°F | | | | 75°F | | | | 85°F | | | | 95°F | | | | 105°F | | | | 115°F | | | |
| | | | Entering Indoor Wet Bulb Temperature | | | | | | | | | | | | | | | | | | | | | | | |
| IDB | Airflow | | 59 | 63 | 67 | 71 | 59 | 63 | 67 | 71 | 59 | 63 | 67 | 71 | 59 | 63 | 67 | 71 | 59 | 63 | 67 | 71 | 59 | 63 | 67 | 71 |
| 70 | 1170 | MBh | 41.8 | 49.6 | 51.1 | | 48.3 | 48.2 | 49.6 | | 45.3 | 46.0 | 47.4 | | 42.3 | 42.9 | 44.3 | | 38.9 | 39.5 | 40.9 | | 29.7 | 30.2 | 31.3 | |
| | | S/T | 0.56 | 0.49 | 0.36 | | 0.55 | 0.49 | 0.37 | | 0.59 | 0.52 | 0.39 | | 0.62 | 0.54 | 0.41 | | 0.64 | 0.57 | 0.44 | | 0.70 | 0.62 | 0.49 | |
| | | ΔT | 23 | 20 | 17 | | 23 | 20 | 16 | | 22 | 20 | 16 | | 21 | 19 | 15 | | 20 | 18 | 15 | | 21 | 20 | 16 | |
| | | kW | 2.24 | 3.71 | 3.70 | | 3.38 | 4.10 | 4.10 | | 4.53 | 4.53 | 4.52 | | 4.97 | 4.96 | 4.96 | | 5.43 | 5.43 | 5.42 | | 3.33 | 3.33 | 3.32 | |
| | | Amps | 9.6 | 14.8 | 14.8 | | 13.6 | 16.5 | 16.5 | | 18.3 | 18.3 | 18.3 | | 20.0 | 20.0 | 20.0 | | 21.6 | 21.6 | 21.6 | | 13.7 | 13.7 | 13.6 | |
| | | Hi PR | 280 | 293 | 295 | | 343 | 337 | 339 | | 382 | 383 | 385 | | 431 | 432 | 434 | | 483 | 484 | 486 | | 513 | 514 | 516 | |
| | | Lo PR | 119 | 120 | 128 | | 120 | 123 | 132 | | 120 | 126 | 134 | | 121 | 128 | 136 | | 123 | 129 | 137 | | 132 | 138 | 147 | |
| | 1380 | MBh | 47.3 | 50.4 | 51.9 | | 48.3 | 49.0 | 50.4 | | 46.0 | 46.7 | 48.1 | | 43.0 | 43.7 | 45.0 | | 39.6 | 40.2 | 41.6 | | 30.3 | 30.8 | 31.9 | |
| | | S/T | 0.61 | 0.56 | 0.43 | | 0.64 | 0.57 | 0.44 | | 0.67 | 0.59 | 0.46 | | 0.69 | 0.62 | 0.49 | | 0.71 | 0.64 | 0.51 | | 0.77 | 0.70 | 0.57 | |
| | | ΔT | 22 | 19 | 15 | | 20 | 18 | 15 | | 20 | 18 | 15 | | 20 | 18 | 14 | | 19 | 17 | 13 | | 20 | 18 | 15 | |
| | | kW | 2.73 | 3.74 | 3.73 | | 4.14 | 4.14 | 4.13 | | 4.56 | 4.56 | 4.55 | | 5.00 | 4.99 | 4.99 | | 5.46 | 5.46 | 5.45 | | 3.34 | 3.34 | 3.34 | |
| | | Amps | 11.2 | 14.9 | 14.9 | | 16.7 | 16.6 | 16.6 | | 18.5 | 18.4 | 18.4 | | 20.1 | 20.1 | 20.1 | | 21.7 | 21.7 | 21.7 | | 13.7 | 13.7 | 13.7 | |
| | | Hi PR | 293 | 296 | 298 | | 339 | 340 | 342 | | 385 | 386 | 388 | | 434 | 435 | 437 | | 486 | 487 | 489 | | 516 | 517 | 519 | |
| | | Lo PR | 119 | 122 | 130 | | 119 | 126 | 134 | | 122 | 128 | 136 | | 123 | 130 | 138 | | 124 | 131 | 139 | | 133 | 140 | 149 | |
| | 1590 | MBh | 51.4 | 51.3 | 52.8 | | 49.2 | 49.9 | 51.3 | | 47.0 | 47.6 | 49.0 | | 43.9 | 44.5 | 45.9 | | 40.5 | 41.1 | 42.5 | | 31.0 | 31.5 | 32.6 | |
| | | S/T | 0.64 | 0.59 | 0.47 | | 0.68 | 0.60 | 0.47 | | 0.70 | 0.63 | 0.50 | | 0.73 | 0.65 | 0.52 | | 0.75 | 0.68 | 0.55 | | 0.81 | 0.73 | 0.60 | |
| | | ΔT | 21 | 18 | 14 | | 19 | 17 | 13 | | 19 | 17 | 13 | | 18 | 16 | 13 | | 18 | 16 | 12 | | 19 | 17 | 14 | |
| | | kW | 3.11 | 3.77 | 3.76 | | 4.17 | 4.16 | 4.15 | | 4.59 | 4.58 | 4.58 | | 5.02 | 5.02 | 5.01 | | 5.49 | 5.48 | 5.48 | | 3.36 | 3.36 | 3.35 | |
| | | Amps | 12.5 | 15.1 | 15.0 | | 16.8 | 16.8 | 16.7 | | 18.6 | 18.6 | 18.5 | | 20.2 | 20.2 | 20.2 | | 21.8 | 21.8 | 21.7 | | 13.8 | 13.8 | 13.8 | |
| | | Hi PR | 304 | 299 | 301 | | 342 | 343 | 345 | | 388 | 389 | 391 | | 437 | 438 | 440 | | 489 | 490 | 492 | | 519 | 520 | 522 | |
| | | Lo PR | 120 | 124 | 132 | | 122 | 128 | 136 | | 124 | 130 | 139 | | 125 | 132 | 140 | | 126 | 133 | 141 | | 136 | 142 | 151 | |
| 75 | 1170 | MBh | 41.9 | 49.7 | 51.1 | 53.4 | 48.3 | 48.2 | 49.7 | 51.9 | 45.3 | 46.0 | 47.4 | 49.6 | 42.3 | 43.0 | 44.3 | 46.4 | 38.9 | 39.6 | 40.9 | 43.0 | 29.7 | 30.3 | 31.4 | 33.0 |
| | | S/T | 0.68 | 0.61 | 0.48 | 0.34 | 0.67 | 0.62 | 0.49 | 0.35 | 0.72 | 0.65 | 0.52 | 0.38 | 0.74 | 0.67 | 0.54 | 0.40 | 0.77 | 0.69 | 0.56 | 0.42 | 0.82 | 0.75 | 0.62 | 0.48 |
| | | ΔT | 28 | 25 | 21 | 17 | 28 | 24 | 21 | 17 | 26 | 24 | 20 | 17 | 25 | 23 | 20 | 16 | 24 | 22 | 19 | 15 | 26 | 24 | 20 | 17 |
| | | kW | 2.24 | 3.70 | 3.70 | 3.74 | 3.37 | 4.10 | 4.09 | 4.13 | 4.53 | 4.53 | 4.52 | 4.55 | 4.97 | 4.96 | 4.95 | 4.99 | 5.43 | 5.43 | 5.42 | 5.46 | 3.33 | 3.33 | 3.32 | 3.34 |
| | | Amps | 9.6 | 14.8 | 14.7 | 14.9 | 13.5 | 16.5 | 16.5 | 16.6 | 18.3 | 18.3 | 18.3 | 18.4 | 20.0 | 20.0 | 20.0 | 20.1 | 21.6 | 21.6 | 21.6 | 21.7 | 13.7 | 13.7 | 13.6 | 13.7 |
| | | Hi PR | 281 | 293 | 295 | 300 | 343 | 337 | 339 | 345 | 382 | 383 | 385 | 390 | 431 | 432 | 434 | 439 | 483 | 485 | 487 | 492 | 513 | 515 | 516 | 521 |
| | | Lo PR | 120 | 120 | 128 | 138 | 120 | 124 | 132 | 142 | 120 | 126 | 134 | 145 | 122 | 128 | 136 | 147 | 123 | 129 | 137 | 147 | 132 | 138 | 147 | 158 |
| | 1380 | MBh | 47.3 | 50.4 | 51.9 | 54.1 | 48.3 | 49.0 | 50.4 | 52.6 | 46.1 | 46.7 | 48.1 | 50.3 | 43.0 | **43.7** | 45.1 | 47.2 | 39.6 | 40.3 | 41.6 | 43.7 | 30.3 | 30.8 | 31.9 | 33.6 |
| | | S/T | 0.73 | 0.68 | 0.55 | 0.42 | 0.76 | 0.69 | 0.56 | 0.42 | 0.79 | 0.72 | 0.59 | 0.45 | 0.81 | **0.74** | 0.61 | 0.47 | 0.84 | 0.77 | 0.63 | 0.50 | 1.01 | 0.82 | 0.69 | 0.55 |
| | | ΔT | 27 | 23 | 20 | 16 | 25 | 23 | 19 | 15 | 25 | 23 | 19 | 15 | 24 | **22** | 18 | 15 | 23 | 21 | 18 | 14 | 24 | 22 | 19 | 15 |
| | | kW | 2.73 | 3.74 | 3.73 | 3.77 | 4.14 | 4.13 | 4.12 | 4.16 | 4.56 | 4.56 | 4.55 | 4.58 | 4.99 | **4.99** | 4.98 | 5.02 | 5.46 | 5.46 | 5.45 | 5.48 | 3.34 | 3.34 | 3.34 | 3.36 |
| | | Amps | 11.2 | 14.9 | 14.9 | 15.1 | 16.7 | 16.6 | 16.6 | 16.8 | 18.5 | 18.4 | 18.4 | 18.6 | 20.1 | **20.1** | 20.1 | 20.2 | 21.7 | 21.7 | 21.7 | 21.8 | 13.7 | 13.7 | 13.7 | 13.8 |
| | | Hi PR | 293 | 296 | 298 | 303 | 339 | 340 | 342 | 348 | 385 | 386 | 388 | 393 | 434 | **435** | 437 | 442 | 486 | 488 | 490 | 494 | 516 | 517 | 519 | 524 |
| | | Lo PR | 119 | 122 | 130 | 141 | 119 | 126 | 134 | 145 | 122 | 128 | 136 | 147 | 123 | **130** | 138 | 149 | 124 | 131 | 139 | 149 | 133 | 140 | 149 | 160 |
| | 1590 | MBh | 51.5 | 51.4 | 52.8 | 55.1 | 49.2 | 49.9 | 51.3 | 53.5 | 47.0 | 47.6 | 49.1 | 51.2 | 43.9 | 44.6 | 46.0 | 48.1 | 40.5 | 41.1 | 42.5 | 44.5 | 31.0 | 31.5 | 32.6 | 34.3 |
| | | S/T | 0.76 | 0.72 | 0.59 | 0.45 | 0.80 | 0.73 | 0.60 | 0.46 | 0.83 | 0.75 | 0.62 | 0.49 | 0.85 | 0.78 | 0.65 | 0.51 | 0.88 | 0.80 | 0.67 | 0.53 | 1.01 | 0.86 | 0.73 | 0.59 |
| | | ΔT | 26 | 22 | 18 | 14 | 24 | 22 | 18 | 14 | 23 | 21 | 18 | 14 | 23 | 21 | 17 | 13 | 22 | 20 | 16 | 13 | 23 | 21 | 18 | 14 |
| | | kW | 3.10 | 3.76 | 3.75 | 3.79 | 4.16 | 4.16 | 4.15 | 4.19 | 4.58 | 4.58 | 4.57 | 4.61 | 5.02 | 5.02 | 5.01 | 5.04 | 5.48 | 5.48 | 5.47 | 5.51 | 3.36 | 3.35 | 3.35 | 3.37 |
| | | Amps | 12.5 | 15.0 | 15.0 | 15.2 | 16.8 | 16.7 | 16.7 | 16.9 | 18.6 | 18.5 | 18.5 | 18.7 | 20.2 | 20.2 | 20.2 | 20.3 | 21.8 | 21.8 | 21.7 | 21.9 | 13.8 | 13.8 | 13.8 | 13.8 |
| | | Hi PR | 304 | 299 | 301 | 306 | 342 | 343 | 345 | 350 | 388 | 389 | 391 | 396 | 437 | 438 | 440 | 445 | 489 | 490 | 492 | 497 | 519 | 520 | 522 | 527 |
| | | Lo PR | 120 | 124 | 132 | 143 | 122 | 128 | 136 | 147 | 124 | 130 | 139 | 150 | 125 | 132 | 140 | 151 | 126 | 133 | 141 | 152 | 136 | 142 | 151 | 162 |

IDB = Entering Indoor Dry Bulb Temperature

Shaded area is ACCA (TVA) conditions

kW = Total system power

High and low pressures are measured at the liquid and suction service valves.

Amps = outdoor unit amps (comp.+fan)

Airflow may vary depending on actual ambient conditions and system operation modes.

## Expanded Cooling Data — DC6VSS4810A* / DFVE48DP1300A* (cont.)

| | | | Outdoor Ambient Temperature | | | | | | | | | | | | | | | | | | | | | | | |
|---|---|---|---|---|---|---|---|---|---|---|---|---|---|---|---|---|---|---|---|---|---|---|---|---|---|---|
| | | | 65°F | | | | 75°F | | | | 85°F | | | | 95°F | | | | 105°F | | | | 115°F | | | |
| | | | Entering Indoor Wet Bulb Temperature | | | | | | | | | | | | | | | | | | | | | | | |
| IDB | Airflow | | 59 | 63 | 67 | 71 | 59 | 63 | 67 | 71 | 59 | 63 | 67 | 71 | 59 | 63 | 67 | 71 | 59 | 63 | 67 | 71 | 59 | 63 | 67 | 71 |
| 80 | 1170 | MBh | 42.1 | 49.9 | 51.4 | 53.6 | 48.5 | 48.5 | 49.9 | 52.1 | 45.6 | 46.3 | 47.7 | 49.8 | 42.6 | 43.2 | 44.6 | 46.7 | 39.2 | 39.8 | 41.1 | 43.2 | 29.9 | 30.4 | 31.5 | 33.2 |
| | | S/T | 0.80 | 0.73 | 0.60 | 0.46 | 0.78 | 0.74 | 0.61 | 0.47 | 0.84 | 0.76 | 0.64 | 0.50 | 0.86 | 0.79 | 0.66 | 0.52 | 1.01 | 0.81 | 0.68 | 0.54 | 1.01 | 0.87 | 0.74 | 0.60 |
| | | ΔT | 33 | 29 | 26 | 22 | 33 | 29 | 25 | 21 | 30 | 28 | 25 | 21 | 29 | 28 | 24 | 20 | 29 | 27 | 23 | 20 | 30 | 28 | 24 | 21 |
| | | kW | 2.24 | 3.71 | 3.70 | 3.74 | 3.38 | 4.10 | 4.09 | 4.13 | 4.53 | 4.53 | 4.52 | 4.56 | 4.97 | 4.96 | 4.96 | 4.99 | 5.43 | 5.43 | 5.42 | 5.46 | 3.33 | 3.33 | 3.32 | 3.34 |
| | | Amps | 9.6 | 14.8 | 14.8 | 14.9 | 13.6 | 16.5 | 16.5 | 16.6 | 18.3 | 18.3 | 18.3 | 18.4 | 20.0 | 20.0 | 20.0 | 20.1 | 21.6 | 21.6 | 21.6 | 21.7 | 13.7 | 13.7 | 13.6 | 13.7 |
| | | Hi PR | 281 | 294 | 296 | 301 | 343 | 338 | 340 | 345 | 383 | 384 | 386 | 391 | 432 | 433 | 435 | 440 | 484 | 485 | 487 | 492 | 514 | 515 | 517 | 522 |
| | | Lo PR | 120 | 120 | 128 | 139 | 120 | 124 | 132 | 143 | 121 | 127 | 135 | 146 | 122 | 128 | 136 | 147 | 123 | 129 | 137 | 148 | 132 | 139 | 147 | 158 |
| | 1380 | MBh | 48.5 | 50.7 | 52.2 | 54.4 | 48.6 | 49.2 | 50.7 | 52.9 | 46.3 | 47.0 | 48.4 | 50.5 | 43.3 | 43.9 | **45.5** | 47.4 | 39.9 | 40.5 | 41.8 | 43.9 | 30.5 | 31.0 | 32.1 | 33.8 |
| | | S/T | 0.85 | 0.80 | 0.67 | 0.53 | 0.88 | 0.81 | 0.68 | 0.54 | 0.91 | 0.84 | 0.71 | 0.57 | 1.00 | 0.86 | **0.73** | 0.59 | 1.01 | 0.89 | 0.76 | 0.62 | 1.01 | 0.95 | 0.81 | 0.67 |
| | | ΔT | 32 | 28 | 24 | 20 | 29 | 27 | 24 | 20 | 29 | 27 | 23 | 20 | 28 | 26 | **23** | 19 | 27 | 25 | 22 | 18 | 28 | 26 | 23 | 19 |
| | | kW | 2.83 | 3.74 | 3.73 | 3.77 | 4.14 | 4.14 | 4.13 | 4.16 | 4.56 | 4.56 | 4.55 | 4.59 | 5.00 | 4.99 | **5.00** | 5.02 | 5.46 | 5.46 | 5.45 | 5.49 | 3.34 | 3.34 | 3.34 | 3.36 |
| | | Amps | 11.5 | 14.9 | 14.9 | 15.1 | 16.7 | 16.6 | 16.6 | 16.8 | 18.5 | 18.4 | 18.4 | 18.6 | 20.1 | 20.1 | **20.4** | 20.2 | 21.7 | 21.7 | 21.7 | 21.8 | 13.7 | 13.7 | 13.7 | 13.8 |
| | | Hi PR | 296 | 297 | 299 | 304 | 340 | 341 | 343 | 348 | 386 | 387 | 389 | 394 | 434 | 436 | **437** | 443 | 487 | 488 | 490 | 495 | 517 | 518 | 520 | 524 |
| | | Lo PR | 119 | 122 | 130 | 141 | 120 | 126 | 134 | 145 | 122 | 129 | 137 | 148 | 124 | 130 | **140** | 149 | 125 | 131 | 139 | 150 | 134 | 141 | 149 | 160 |
| | 1590 | MBh | 51.7 | 51.6 | 53.1 | 55.3 | 49.5 | 50.2 | 51.6 | 53.8 | 47.2 | 47.9 | 49.3 | 51.4 | 44.2 | 44.8 | 46.2 | 48.3 | 40.7 | 41.4 | 42.7 | 44.8 | 31.2 | 31.7 | 32.8 | 34.5 |
| | | S/T | 0.87 | 0.83 | 0.71 | 0.57 | 0.92 | 0.84 | 0.72 | 0.58 | 0.99 | 0.87 | 0.74 | 0.61 | 1.00 | 0.90 | 0.77 | 0.63 | 1.01 | 0.92 | 0.79 | 0.65 | 1.01 | 0.98 | 0.85 | 0.71 |
| | | ΔT | 31 | 27 | 23 | 19 | 28 | 26 | 22 | 18 | 28 | 26 | 22 | 18 | 27 | 25 | 21 | 18 | 26 | 24 | 21 | 17 | 27 | 25 | 22 | 18 |
| | | kW | 3.11 | 3.77 | 3.76 | 3.80 | 4.16 | 4.16 | 4.15 | 4.19 | 4.59 | 4.58 | 4.58 | 4.61 | 5.02 | 5.02 | 5.01 | 5.05 | 5.49 | 5.48 | 5.48 | 5.51 | 3.36 | 3.36 | 3.35 | 3.37 |
| | | Amps | 12.5 | 15.1 | 15.0 | 15.2 | 16.8 | 16.8 | 16.7 | 16.9 | 18.6 | 18.5 | 18.5 | 18.7 | 20.2 | 20.2 | 20.2 | 20.3 | 21.8 | 21.8 | 21.7 | 21.9 | 13.8 | 13.8 | 13.8 | 13.8 |
| | | Hi PR | 304 | 300 | 302 | 307 | 343 | 344 | 346 | 351 | 388 | 390 | 392 | 397 | 437 | 439 | 441 | 446 | 490 | 491 | 493 | 498 | 519 | 521 | 522 | 527 |
| | | Lo PR | 121 | 125 | 133 | 144 | 122 | 128 | 137 | 148 | 125 | 131 | 139 | 150 | 126 | 132 | 140 | 151 | 127 | 133 | 141 | 152 | 136 | 143 | 151 | 163 |
| 85 | 1170 | MBh | 48.5 | 50.8 | 52.2 | 54.5 | 48.6 | 49.3 | 50.7 | 52.9 | 46.4 | 47.0 | 48.5 | 50.6 | 43.3 | 44.0 | 45.4 | 47.5 | 39.9 | 40.6 | 41.9 | 44.0 | 30.5 | 31.1 | 32.2 | 33.8 |
| | | S/T | 0.98 | 0.82 | 0.69 | 0.56 | 0.99 | 0.83 | 0.70 | 0.57 | 0.99 | 0.86 | 0.73 | 0.60 | 1.00 | 0.89 | 0.75 | 0.62 | 1.01 | 0.91 | 0.78 | 0.64 | 1.01 | 1.01 | 0.84 | 0.70 |
| | | ΔT | 38 | 33 | 30 | 26 | 35 | 33 | 29 | 25 | 34 | 32 | 29 | 25 | 33 | 31 | 28 | 24 | 32 | 30 | 27 | 23 | 33 | 32 | 28 | 24 |
| | | kW | 2.82 | 3.72 | 3.71 | 3.75 | 4.12 | 4.11 | 4.10 | 4.14 | 4.54 | 4.54 | 4.53 | 4.57 | 4.98 | 4.97 | 4.96 | 5.00 | 5.44 | 5.44 | 5.43 | 5.47 | 3.33 | 3.33 | 3.33 | 3.35 |
| | | Amps | 11.4 | 14.8 | 14.8 | 15.0 | 16.6 | 16.5 | 16.5 | 16.7 | 18.4 | 18.4 | 18.3 | 18.5 | 20.1 | 20.1 | 20.0 | 20.2 | 21.6 | 21.6 | 21.6 | 21.7 | 13.7 | 13.7 | 13.7 | 13.7 |
| | | Hi PR | 295 | 295 | 297 | 302 | 338 | 339 | 341 | 346 | 384 | 385 | 387 | 392 | 433 | 434 | 436 | 441 | 485 | 486 | 488 | 493 | 515 | 516 | 518 | 523 |
| | | Lo PR | 119 | 122 | 130 | 141 | 120 | 126 | 134 | 145 | 122 | 128 | 137 | 148 | 124 | 130 | 138 | 149 | 125 | 131 | 139 | 150 | 134 | 140 | 149 | 160 |
| | 1380 | MBh | 51.6 | 51.5 | 53.0 | 55.2 | 49.4 | 50.0 | 51.5 | 53.7 | 47.1 | 47.8 | 49.2 | 51.3 | 44.0 | 44.7 | 46.1 | 48.2 | 40.6 | 41.3 | 42.6 | 44.7 | 31.1 | 31.6 | 32.7 | 34.4 |
| | | S/T | 0.98 | 0.89 | 0.77 | 0.63 | 0.99 | 0.91 | 0.78 | 0.64 | 0.99 | 0.93 | 0.80 | 0.67 | 1.00 | 0.96 | 0.83 | 0.69 | 1.01 | 0.98 | 0.85 | 0.72 | 1.01 | 1.01 | 0.91 | 0.77 |
| | | ΔT | 36 | 32 | 28 | 24 | 33 | 31 | 27 | 24 | 33 | 31 | 27 | 23 | 32 | 30 | 26 | 23 | 31 | 29 | 25 | 22 | 33 | 31 | 27 | 23 |
| | | kW | 3.09 | 3.75 | 3.74 | 3.78 | 4.15 | 4.14 | 4.14 | 4.17 | 4.57 | 4.57 | 4.56 | 4.60 | 5.01 | 5.00 | 4.99 | 5.03 | 5.47 | 5.47 | 5.46 | 5.50 | 3.35 | 3.35 | 3.34 | 3.36 |
| | | Amps | 12.4 | 15.0 | 14.9 | 15.1 | 16.7 | 16.7 | 16.7 | 16.8 | 18.5 | 18.5 | 18.4 | 18.6 | 20.2 | 20.2 | 20.1 | 20.3 | 21.7 | 21.7 | 21.7 | 21.8 | 13.8 | 13.7 | 13.7 | 13.8 |
| | | Hi PR | 303 | 298 | 300 | 305 | 341 | 342 | 344 | 349 | 387 | 388 | 390 | 395 | 436 | 437 | 439 | 444 | 488 | 489 | 491 | 496 | 518 | 519 | 521 | 526 |
| | | Lo PR | 120 | 124 | 132 | 143 | 122 | 128 | 136 | 147 | 124 | 130 | 139 | 150 | 125 | 132 | 140 | 151 | 126 | 133 | 141 | 152 | 132 | 139 | 148 | 160 |
| | 1590 | MBh | 51.8 | 52.5 | 53.9 | 56.2 | 50.3 | 51.0 | 52.4 | 54.6 | 48.0 | 48.7 | 50.1 | 52.2 | 44.9 | 45.6 | 47.0 | 49.1 | 41.5 | 42.1 | 43.5 | 45.5 | 31.8 | 32.3 | 33.4 | 35.1 |
| | | S/T | 0.98 | 0.93 | 0.80 | 0.67 | 0.99 | 0.94 | 0.81 | 0.68 | 0.99 | 0.97 | 0.84 | 0.70 | 1.00 | 0.99 | 0.86 | 0.73 | 1.01 | 1.01 | 0.89 | 0.75 | 1.01 | 1.01 | 0.95 | 0.81 |
| | | ΔT | 33 | 31 | 27 | 23 | 32 | 30 | 26 | 22 | 32 | 30 | 26 | 22 | 31 | 29 | 25 | 21 | 30 | 28 | 24 | 21 | 31 | 29 | 25 | 22 |
| | | kW | 3.78 | 3.78 | 3.77 | 3.81 | 4.17 | 4.17 | 4.16 | 4.20 | 4.60 | 4.59 | 4.58 | 4.62 | 5.03 | 5.03 | 5.02 | 5.05 | 5.50 | 5.49 | 5.48 | 5.52 | 3.36 | 3.36 | 3.36 | 3.37 |
| | | Amps | 15.1 | 15.1 | 15.1 | 15.2 | 16.8 | 16.8 | 16.8 | 16.9 | 18.6 | 18.6 | 18.6 | 18.7 | 20.3 | 20.3 | 20.2 | 20.4 | 21.8 | 21.8 | 21.8 | 21.9 | 13.8 | 13.8 | 13.8 | 13.9 |
| | | Hi PR | 300 | 301 | 303 | 308 | 344 | 345 | 347 | 352 | 390 | 391 | 393 | 398 | 439 | 440 | 442 | 447 | 491 | 492 | 494 | 499 | 521 | 522 | 524 | 528 |
| | | Lo PR | 120 | 126 | 135 | 146 | 124 | 130 | 138 | 150 | 126 | 133 | 141 | 152 | 127 | 134 | 142 | 153 | 128 | 135 | 143 | 154 | 138 | 144 | 153 | 165 |

IDB = Entering Indoor Dry Bulb Temperature

Shaded area is AHRI conditions

kW = Total system power

High and low pressures are measured at the liquid and suction service valves.

Amps = outdoor unit amps (comp.+fan)

Airflow may vary depending on actual ambient conditions and system operation modes.

# Expanded Cooling Data — DC6VSS6010A* / DFVE60DP1300A*

| | | | Outdoor Ambient Temperature | | | | | | | | | | | | | | | | | | | | | | | |
|---|---|---|---|---|---|---|---|---|---|---|---|---|---|---|---|---|---|---|---|---|---|---|---|---|---|---|
| | | | 65°F | | | | 75°F | | | | 85°F | | | | 95°F | | | | 105°F | | | | 115°F | | | |
| | | | Entering Indoor Wet Bulb Temperature | | | | | | | | | | | | | | | | | | | | | | | |
| IDB | Airflow | | 59 | 63 | 67 | 71 | 59 | 63 | 67 | 71 | 59 | 63 | 67 | 71 | 59 | 63 | 67 | 71 | 59 | 63 | 67 | 71 | 59 | 63 | 67 | 71 |
| 70 | 1390 | MBh | 29.1 | 42.9 | 59.2 | | 39.7 | 56.1 | 57.8 | | 47.4 | 53.7 | 55.4 | | 49.6 | 50.4 | 52.0 | | 42.2 | 42.9 | 44.3 | | 33.3 | 33.8 | 35.1 | |
| | | S/T | 0.67 | 0.51 | 0.36 | | 0.60 | 0.49 | 0.36 | | 0.60 | 0.52 | 0.39 | | 0.61 | 0.53 | 0.41 | | 0.64 | 0.56 | 0.43 | | 0.71 | 0.63 | 0.50 | |
| | | ΔT | 20 | 20 | 16 | | 21 | 19 | 16 | | 22 | 19 | 16 | | 20 | 18 | 15 | | 21 | 19 | 15 | | 21 | 19 | 16 | |
| | | kW | 1.60 | 2.45 | 4.12 | | 2.62 | 4.68 | 4.67 | | 4.09 | 5.30 | 5.29 | | 5.97 | 5.97 | 5.96 | | 5.87 | 5.87 | 5.86 | | 5.09 | 5.09 | 5.08 | |
| | | Amps | 6.5 | 9.9 | 16.3 | | 10.6 | 18.6 | 18.6 | | 16.2 | 21.2 | 21.1 | | 24.0 | 24.0 | 23.9 | | 23.6 | 23.6 | 23.5 | | 20.5 | 20.5 | 20.4 | |
| | | Hi PR | 252 | 269 | 298 | | 308 | 343 | 345 | | 371 | 392 | 394 | | 443 | 444 | 446 | | 483 | 485 | 487 | | 518 | 520 | 521 | |
| | | Lo PR | 121 | 120 | 122 | | 119 | 120 | 128 | | 119 | 124 | 133 | | 121 | 128 | 137 | | 124 | 132 | 141 | | 133 | 141 | 150 | |
| | 1640 | MBh | 32.0 | 47.6 | 60.1 | | 43.7 | 57.0 | 58.6 | | 51.4 | 54.6 | 56.2 | | 50.4 | 51.2 | 52.8 | | 43.0 | 43.6 | 45.1 | | 33.9 | 34.5 | 35.7 | |
| | | S/T | 0.73 | 0.58 | 0.43 | | 0.66 | 0.56 | 0.43 | | 0.67 | 0.59 | 0.46 | | 0.68 | 0.61 | 0.48 | | 0.71 | 0.64 | 0.51 | | 0.78 | 0.71 | 0.57 | |
| | | ΔT | 19 | 19 | 14 | | 20 | 18 | 14 | | 21 | 18 | 14 | | 19 | 17 | 14 | | 19 | 18 | 14 | | 20 | 18 | 14 | |
| | | kW | 1.73 | 2.80 | 4.15 | | 2.95 | 4.72 | 4.71 | | 4.56 | 5.34 | 5.33 | | 6.01 | 6.00 | 5.99 | | 5.90 | 5.90 | 5.89 | | 5.12 | 5.11 | 5.11 | |
| | | Amps | 7.0 | 11.2 | 16.4 | | 11.8 | 18.8 | 18.7 | | 18.1 | 21.3 | 21.3 | | 24.2 | 24.1 | 24.1 | | 23.7 | 23.7 | 23.7 | | 20.6 | 20.6 | 20.5 | |
| | | Hi PR | 256 | 277 | 301 | | 315 | 346 | 348 | | 380 | 395 | 397 | | 446 | 447 | 450 | | 486 | 487 | 489 | | 521 | 522 | 524 | |
| | | Lo PR | 121 | 120 | 124 | | 119 | 122 | 130 | | 119 | 126 | 135 | | 122 | 130 | 139 | | 126 | 134 | 143 | | 135 | 143 | 152 | |
| | 1890 | MBh | 38.5 | 53.3 | 61.2 | | 49.0 | 58.0 | 59.7 | | 54.9 | 55.6 | 57.3 | | 51.5 | 52.3 | 53.9 | | 43.9 | 44.6 | 46.0 | | 34.7 | 35.3 | 36.5 | |
| | | S/T | 0.72 | 0.60 | 0.46 | | 0.69 | 0.60 | 0.47 | | 0.69 | 0.62 | 0.49 | | 0.71 | 0.64 | 0.51 | | 0.75 | 0.67 | 0.54 | | 0.82 | 0.74 | 0.61 | |
| | | ΔT | 19 | 18 | 13 | | 19 | 17 | 13 | | 18 | 17 | 13 | | 18 | 16 | 12 | | 18 | 16 | 13 | | 19 | 17 | 13 | |
| | | kW | 2.10 | 3.26 | 4.18 | | 3.42 | 4.75 | 4.74 | | 5.37 | 5.37 | 5.36 | | 6.04 | 6.03 | 6.02 | | 5.93 | 5.92 | 5.91 | | 5.14 | 5.13 | 5.13 | |
| | | Amps | 8.5 | 12.9 | 16.5 | | 13.6 | 18.9 | 18.8 | | 21.5 | 21.5 | 21.4 | | 24.3 | 24.3 | 24.2 | | 23.8 | 23.8 | 23.8 | | 20.7 | 20.6 | 20.6 | |
| | | Hi PR | 266 | 287 | 304 | | 326 | 349 | 351 | | 396 | 398 | 400 | | 449 | 450 | 452 | | 489 | 490 | 492 | | 524 | 525 | 527 | |
| | | Lo PR | 119 | 120 | 127 | | 120 | 124 | 132 | | 121 | 128 | 137 | | 125 | 132 | 141 | | 128 | 136 | 145 | | 137 | 145 | 155 | |
| 75 | 1390 | MBh | 29.1 | 42.9 | 59.3 | 61.9 | 39.8 | 56.1 | 57.8 | 60.3 | 47.5 | 53.7 | 55.4 | 57.9 | 49.6 | 50.4 | 52.0 | 54.5 | 42.2 | 42.9 | 44.4 | 46.6 | 33.3 | 33.9 | 35.1 | 37.0 |
| | | S/T | 0.81 | 0.64 | 0.48 | 0.34 | 0.73 | 0.61 | 0.49 | 0.35 | 0.72 | 0.64 | 0.51 | 0.37 | 0.73 | 0.66 | 0.53 | 0.39 | 0.76 | 0.69 | 0.56 | 0.42 | 0.83 | 0.76 | 0.62 | 0.48 |
| | | ΔT | 24 | 25 | 20 | 16 | 26 | 23 | 20 | 16 | 27 | 23 | 20 | 16 | 24 | 22 | 19 | 15 | 25 | 23 | 20 | 16 | 25 | 23 | 20 | 16 |
| | | kW | 1.60 | 2.45 | 4.11 | 4.16 | 2.62 | 4.68 | 4.67 | 4.71 | 4.09 | 5.30 | 5.29 | 5.33 | 5.97 | 5.96 | 5.95 | 6.00 | 5.87 | 5.86 | 5.85 | 5.89 | 5.09 | 5.09 | 5.08 | 5.11 |
| | | Amps | 6.5 | 9.9 | 16.2 | 16.4 | 10.6 | 18.6 | 18.5 | 18.7 | 16.2 | 21.2 | 21.1 | 21.3 | 24.0 | 24.0 | 23.9 | 24.1 | 23.6 | 23.5 | 23.5 | 23.7 | 20.5 | 20.5 | 20.4 | 20.5 |
| | | Hi PR | 252 | 269 | 299 | 304 | 308 | 343 | 345 | 350 | 371 | 392 | 394 | 399 | 443 | 445 | 447 | 452 | 484 | 485 | 487 | 492 | 519 | 520 | 522 | 526 |
| | | Lo PR | 121 | 120 | 122 | 133 | 119 | 120 | 128 | 139 | 119 | 124 | 133 | 144 | 121 | 128 | 137 | 148 | 124 | 132 | 141 | 152 | 133 | 141 | 150 | 162 |
| | 1640 | MBh | 32.0 | 47.6 | 60.2 | 62.7 | 43.7 | 57.0 | 58.7 | 61.2 | 51.4 | 54.6 | 56.2 | 58.8 | 50.5 | **51.2** | 52.9 | 55.3 | 43.0 | 43.7 | 45.1 | 47.4 | 33.9 | 34.5 | 35.7 | 37.6 |
| | | S/T | 0.87 | 0.71 | 0.55 | 0.42 | 0.79 | 0.68 | 0.56 | 0.42 | 0.79 | 0.71 | 0.58 | 0.45 | 0.80 | **0.73** | 0.60 | 0.46 | 0.84 | 0.76 | 0.63 | 0.49 | 1.00 | 0.83 | 0.70 | 0.56 |
| | | ΔT | 23 | 23 | 19 | 15 | 25 | 22 | 18 | 15 | 25 | 22 | 18 | 15 | 23 | **21** | 18 | 14 | 24 | 22 | 18 | 14 | 24 | 22 | 19 | 15 |
| | | kW | 1.73 | 2.79 | 4.15 | 4.19 | 2.95 | 4.72 | 4.71 | 4.75 | 4.55 | 5.33 | 5.32 | 5.37 | 6.00 | **6.00** | 5.99 | 6.03 | 5.90 | 5.89 | 5.89 | 5.92 | 5.11 | 5.11 | 5.11 | 5.13 |
| | | Amps | 7.0 | 11.2 | 16.4 | 16.6 | 11.8 | 18.7 | 18.7 | 18.9 | 18.1 | 21.3 | 21.3 | 21.5 | 24.1 | **24.1** | 24.1 | 24.3 | 23.7 | 23.7 | 23.6 | 23.8 | 20.6 | 20.6 | 20.5 | 20.6 |
| | | Hi PR | 257 | 277 | 302 | 307 | 315 | 346 | 348 | 353 | 381 | 395 | 397 | 402 | 446 | **448** | 450 | 455 | 486 | 488 | 490 | 495 | 521 | 523 | 525 | 529 |
| | | Lo PR | 121 | 120 | 124 | 135 | 120 | 122 | 130 | 141 | 119 | 126 | 135 | 146 | 122 | **130** | 139 | 150 | 126 | 134 | 143 | 154 | 135 | 143 | 152 | 164 |
| | 1890 | MBh | 38.5 | 53.4 | 61.2 | 63.8 | 49.0 | 58.1 | 59.7 | 62.3 | 54.9 | 55.7 | 57.3 | 59.8 | 51.5 | 52.3 | 53.9 | 56.4 | 43.9 | 44.6 | 46.1 | 48.3 | 34.7 | 35.3 | 36.5 | 38.4 |
| | | S/T | 0.86 | 0.73 | 0.59 | 0.45 | 0.82 | 0.72 | 0.59 | 0.46 | 0.82 | 0.74 | 0.62 | 0.48 | 0.83 | 0.76 | 0.63 | 0.50 | 0.87 | 0.80 | 0.67 | 0.53 | 1.00 | 0.87 | 0.74 | 0.60 |
| | | ΔT | 23 | 22 | 18 | 14 | 24 | 21 | 17 | 13 | 23 | 21 | 17 | 13 | 22 | 20 | 17 | 13 | 23 | 21 | 17 | 13 | 23 | 21 | 17 | 14 |
| | | kW | 2.10 | 3.25 | 4.18 | 4.22 | 3.41 | 4.74 | 4.73 | 4.78 | 5.37 | 5.36 | 5.35 | 5.40 | 6.03 | 6.03 | 6.02 | 6.06 | 5.92 | 5.92 | 5.91 | 5.95 | 5.13 | 5.13 | 5.12 | 5.15 |
| | | Amps | 8.5 | 12.9 | 16.5 | 16.7 | 13.6 | 18.9 | 18.8 | 19.0 | 21.5 | 21.5 | 21.4 | 21.6 | 24.3 | 24.3 | 24.2 | 24.4 | 23.8 | 23.8 | 23.7 | 23.9 | 20.6 | 20.6 | 20.6 | 20.7 |
| | | Hi PR | 266 | 287 | 305 | 310 | 326 | 349 | 351 | 356 | 397 | 398 | 400 | 405 | 449 | 451 | 453 | 458 | 489 | 491 | 493 | 498 | 524 | 525 | 527 | 532 |
| | | Lo PR | 120 | 120 | 127 | 137 | 120 | 124 | 132 | 143 | 121 | 128 | 137 | 148 | 125 | 132 | 141 | 152 | 128 | 136 | 145 | 156 | 137 | 145 | 155 | 166 |

IDB = Entering Indoor Dry Bulb Temperature

Shaded area is ACCA (TVA) conditions

kW = Total system power

High and low pressures are measured at the liquid and suction service valves.

Amps = outdoor unit amps (comp.+fan)

Airflow may vary depending on actual ambient conditions and system operation modes.

## Expanded Cooling Data — DC6VSS6010A* / DFVE60DP1300A* (cont.)

| | | | Outdoor Ambient Temperature | | | | | | | | | | | | | | | | | | | | | | | |
|---|---|---|---|---|---|---|---|---|---|---|---|---|---|---|---|---|---|---|---|---|---|---|---|---|---|---|
| | | | 65°F | | | | 75°F | | | | 85°F | | | | 95°F | | | | 105°F | | | | 115°F | | | |
| | | | Entering Indoor Wet Bulb Temperature | | | | | | | | | | | | | | | | | | | | | | | |
| IDB | Airflow | | 59 | 63 | 67 | 71 | 59 | 63 | 67 | 71 | 59 | 63 | 67 | 71 | 59 | 63 | 67 | 71 | 59 | 63 | 67 | 71 | 59 | 63 | 67 | 71 |
| 80 | 1390 | MBh | 31.7 | 45.0 | 59.6 | 62.2 | 40.0 | 56.4 | 58.1 | 60.6 | 47.7 | 54.0 | 55.7 | 58.2 | 49.9 | 50.7 | 52.3 | 54.8 | 42.5 | 43.2 | 44.6 | 46.9 | 33.5 | 34.1 | 35.3 | 37.2 |
| | | S/T | 0.92 | 0.76 | 0.60 | 0.46 | 0.85 | 0.73 | 0.60 | 0.47 | 0.84 | 0.76 | 0.63 | 0.49 | 0.85 | 0.77 | 0.65 | 0.51 | 1.00 | 0.81 | 0.68 | 0.54 | 1.00 | 0.88 | 0.75 | 0.61 |
| | | ΔT | 29 | 29 | 25 | 21 | 30 | 28 | 24 | 20 | 31 | 27 | 24 | 20 | 28 | 27 | 23 | 20 | 30 | 28 | 24 | 20 | 29 | 27 | 24 | 20 |
| | | kW | 1.72 | 2.60 | 4.12 | 4.16 | 2.62 | 4.68 | 4.67 | 4.72 | 4.09 | 5.30 | 5.29 | 5.33 | 5.97 | 5.97 | 5.96 | 6.00 | 5.87 | 5.86 | 5.86 | 5.89 | 5.09 | 5.09 | 5.08 | 5.11 |
| | | Amps | 7.0 | 10.4 | 16.3 | 16.4 | 10.6 | 18.6 | 18.6 | 18.7 | 16.2 | 21.2 | 21.1 | 21.3 | 24.0 | 24.0 | 23.9 | 24.1 | 23.6 | 23.6 | 23.5 | 23.7 | 20.5 | 20.5 | 20.4 | 20.6 |
| | | Hi PR | 254 | 272 | 299 | 304 | 309 | 344 | 346 | 351 | 372 | 393 | 395 | 400 | 444 | 445 | 447 | 452 | 484 | 485 | 487 | 492 | 519 | 520 | 522 | 527 |
| | | Lo PR | 119 | 119 | 123 | 133 | 120 | 120 | 129 | 139 | 120 | 125 | 133 | 144 | 121 | 128 | 137 | 148 | 125 | 132 | 141 | 152 | 133 | 141 | 151 | 162 |
| | 1640 | MBh | 34.0 | 50.3 | 60.4 | 63.0 | 43.9 | 57.3 | 59.0 | 61.5 | 54.1 | 54.9 | 56.5 | 59.0 | 50.8 | 51.5 | **53.5** | 55.6 | 43.2 | 43.9 | 45.4 | 47.6 | 34.1 | 34.7 | 35.9 | 37.8 |
| | | S/T | 0.98 | 0.82 | 0.67 | 0.53 | 0.92 | 0.80 | 0.68 | 0.54 | 0.90 | 0.83 | 0.70 | 0.56 | 1.00 | 0.85 | **0.72** | 0.58 | 1.00 | 0.88 | 0.75 | 0.61 | 1.00 | 0.96 | 0.82 | 0.68 |
| | | ΔT | 28 | 28 | 23 | 19 | 29 | 26 | 23 | 19 | 28 | 26 | 22 | 19 | 27 | 25 | **22** | 18 | 28 | 26 | 23 | 19 | 28 | 26 | 23 | 19 |
| | | kW | 1.83 | 3.01 | 4.15 | 4.20 | 2.95 | 4.72 | 4.71 | 4.75 | 5.34 | 5.34 | 5.33 | 5.37 | 6.01 | 6.00 | **5.94** | 6.03 | 5.90 | 5.90 | 5.89 | 5.92 | 5.12 | 5.11 | 5.11 | 5.14 |
| | | Amps | 7.5 | 12.0 | 16.4 | 16.6 | 11.8 | 18.8 | 18.7 | 18.9 | 21.4 | 21.3 | 21.3 | 21.5 | 24.2 | 24.1 | **24.0** | 24.3 | 23.7 | 23.7 | 23.7 | 23.8 | 20.6 | 20.6 | 20.5 | 20.7 |
| | | Hi PR | 259 | 281 | 302 | 307 | 316 | 347 | 349 | 354 | 394 | 396 | 398 | 403 | 447 | 448 | **447** | 455 | 487 | 488 | 490 | 495 | 522 | 523 | 525 | 530 |
| | | Lo PR | 120 | 119 | 125 | 135 | 120 | 122 | 131 | 141 | 119 | 127 | 135 | 146 | 123 | 130 | **141** | 150 | 127 | 134 | 143 | 155 | 135 | 143 | 153 | 164 |
| | 1890 | MBh | 40.1 | 57.2 | 61.5 | 64.1 | 51.6 | 58.4 | 60.0 | 62.6 | 55.2 | 55.9 | 57.6 | 60.1 | 51.8 | 52.6 | 54.2 | 56.6 | 44.2 | 44.9 | 46.3 | 48.6 | 34.9 | 35.5 | 36.7 | 38.6 |
| | | S/T | 0.97 | 0.85 | 0.71 | 0.57 | 0.93 | 0.84 | 0.71 | 0.58 | 0.93 | 0.86 | 0.73 | 0.60 | 1.00 | 0.88 | 0.75 | 0.62 | 1.00 | 0.92 | 0.79 | 0.65 | 1.00 | 1.00 | 0.86 | 0.72 |
| | | ΔT | 28 | 27 | 22 | 18 | 29 | 25 | 21 | 18 | 27 | 25 | 21 | 18 | 26 | 24 | 21 | 17 | 27 | 25 | 21 | 18 | 27 | 25 | 22 | 18 |
| | | kW | 2.19 | 3.60 | 4.18 | 4.23 | 3.67 | 4.75 | 4.74 | 4.78 | 5.37 | 5.37 | 5.36 | 5.40 | 6.03 | 6.03 | 6.02 | 6.06 | 5.92 | 5.92 | 5.91 | 5.95 | 5.14 | 5.13 | 5.13 | 5.15 |
| | | Amps | 8.9 | 14.2 | 16.5 | 16.7 | 14.6 | 18.9 | 18.8 | 19.0 | 21.5 | 21.5 | 21.4 | 21.6 | 24.3 | 24.3 | 24.2 | 24.4 | 23.8 | 23.8 | 23.8 | 23.9 | 20.7 | 20.6 | 20.6 | 20.7 |
| | | Hi PR | 268 | 293 | 305 | 310 | 331 | 350 | 352 | 357 | 397 | 399 | 401 | 406 | 450 | 451 | 453 | 458 | 490 | 491 | 493 | 498 | 525 | 526 | 528 | 532 |
| | | Lo PR | 119 | 119 | 127 | 138 | 119 | 124 | 133 | 144 | 122 | 129 | 138 | 149 | 125 | 133 | 142 | 153 | 129 | 137 | 146 | 157 | 137 | 145 | 155 | 167 |
| 85 | 1390 | MBh | 34.0 | 50.4 | 60.5 | 63.1 | 44.0 | 57.4 | 59.0 | 61.6 | 54.2 | 55.0 | 56.6 | 59.1 | 50.8 | 51.6 | 53.2 | 55.7 | 43.3 | 44.0 | 45.5 | 47.7 | 34.2 | 34.8 | 36.0 | 37.9 |
| | | S/T | 1.00 | 0.85 | 0.69 | 0.56 | 1.00 | 0.83 | 0.70 | 0.56 | 1.00 | 0.85 | 0.72 | 0.59 | 1.00 | 0.87 | 0.74 | 0.61 | 1.00 | 0.91 | 0.78 | 0.64 | 1.00 | 1.00 | 0.85 | 0.71 |
| | | ΔT | 33 | 34 | 28 | 25 | 34 | 31 | 28 | 24 | 33 | 31 | 28 | 24 | 32 | 30 | 27 | 23 | 33 | 31 | 28 | 24 | 33 | 31 | 28 | 24 |
| | | kW | 1.82 | 2.99 | 4.13 | 4.17 | 2.93 | 4.69 | 4.68 | 4.73 | 5.32 | 5.31 | 5.30 | 5.34 | 5.98 | 5.98 | 5.97 | 6.01 | 5.88 | 5.87 | 5.87 | 5.90 | 5.10 | 5.10 | 5.09 | 5.12 |
| | | Amps | 7.4 | 11.9 | 16.3 | 16.5 | 11.8 | 18.6 | 18.6 | 18.8 | 21.3 | 21.2 | 21.2 | 21.4 | 24.0 | 24.0 | 24.0 | 24.2 | 23.6 | 23.6 | 23.6 | 23.7 | 20.5 | 20.5 | 20.5 | 20.6 |
| | | Hi PR | 258 | 280 | 301 | 306 | 314 | 345 | 347 | 352 | 393 | 394 | 396 | 401 | 445 | 447 | 449 | 454 | 485 | 487 | 489 | 494 | 520 | 522 | 523 | 528 |
| | | Lo PR | 119 | 119 | 124 | 135 | 120 | 122 | 130 | 141 | 119 | 126 | 135 | 146 | 123 | 130 | 139 | 150 | 126 | 134 | 143 | 154 | 135 | 143 | 152 | 164 |
| | 1640 | MBh | 38.6 | 53.5 | 61.4 | 64.0 | 49.2 | 58.2 | 59.9 | 62.4 | 55.0 | 55.8 | 57.5 | 60.0 | 51.7 | 52.4 | 54.0 | 56.5 | 44.1 | 44.7 | 46.2 | 48.4 | 34.8 | 35.4 | 36.6 | 38.5 |
| | | S/T | 1.00 | 0.91 | 0.77 | 0.63 | 1.00 | 0.90 | 0.77 | 0.64 | 1.00 | 0.92 | 0.79 | 0.66 | 1.00 | 0.94 | 0.81 | 0.68 | 1.00 | 1.00 | 0.85 | 0.71 | 1.00 | 1.00 | 0.92 | 0.78 |
| | | ΔT | 33 | 32 | 27 | 23 | 34 | 30 | 26 | 23 | 32 | 30 | 26 | 23 | 31 | 29 | 25 | 22 | 32 | 30 | 26 | 23 | 32 | 30 | 26 | 23 |
| | | kW | 2.09 | 3.24 | 4.16 | 4.21 | 3.40 | 4.73 | 4.72 | 4.76 | 5.35 | 5.35 | 5.34 | 5.38 | 6.02 | 6.01 | 6.00 | 6.05 | 5.91 | 5.91 | 5.90 | 5.93 | 5.12 | 5.12 | 5.11 | 5.14 |
| | | Amps | 8.5 | 12.8 | 16.5 | 16.6 | 13.5 | 18.8 | 18.8 | 18.9 | 21.4 | 21.4 | 21.3 | 21.5 | 24.2 | 24.2 | 24.1 | 24.3 | 23.7 | 23.7 | 23.7 | 23.9 | 20.6 | 20.6 | 20.6 | 20.7 |
| | | Hi PR | 265 | 286 | 304 | 309 | 325 | 348 | 350 | 355 | 396 | 397 | 399 | 404 | 448 | 450 | 452 | 457 | 488 | 490 | 492 | 497 | 523 | 524 | 526 | 531 |
| | | Lo PR | 119 | 120 | 127 | 137 | 120 | 124 | 132 | 143 | 121 | 128 | 137 | 148 | 124 | 132 | 141 | 152 | 128 | 136 | 145 | 156 | 137 | 145 | 154 | 166 |
| | 1890 | MBh | 44.8 | 60.8 | 62.5 | 65.1 | 55.9 | 59.3 | 61.0 | 63.5 | 56.1 | 56.9 | 58.5 | 61.0 | 52.7 | 53.5 | 55.1 | 57.6 | 45.0 | 45.7 | 47.2 | 49.4 | 35.6 | 36.2 | 37.4 | 39.3 |
| | | S/T | 1.00 | 0.93 | 0.80 | 0.67 | 1.00 | 0.93 | 0.81 | 0.67 | 1.00 | 0.96 | 0.83 | 0.70 | 1.00 | 0.98 | 0.85 | 0.71 | 1.00 | 1.00 | 0.89 | 0.75 | 1.00 | 1.00 | 0.96 | 0.82 |
| | | ΔT | 32 | 30 | 26 | 22 | 33 | 29 | 25 | 22 | 30 | 29 | 25 | 21 | 30 | 28 | 24 | 21 | 31 | 29 | 25 | 21 | 30 | 29 | 25 | 22 |
| | | kW | 2.50 | 4.20 | 4.19 | 4.24 | 4.07 | 4.76 | 4.75 | 4.79 | 5.38 | 5.38 | 5.37 | 5.41 | 6.05 | 6.04 | 6.03 | 6.07 | 5.93 | 5.93 | 5.92 | 5.96 | 5.14 | 5.14 | 5.13 | 5.16 |
| | | Amps | 10.0 | 16.6 | 16.6 | 16.8 | 16.1 | 18.9 | 18.9 | 19.1 | 21.5 | 21.5 | 21.5 | 21.7 | 24.3 | 24.3 | 24.3 | 24.5 | 23.9 | 23.8 | 23.8 | 24.0 | 20.7 | 20.7 | 20.6 | 20.8 |
| | | Hi PR | 275 | 304 | 306 | 312 | 338 | 351 | 353 | 358 | 399 | 400 | 402 | 407 | 451 | 453 | 455 | 460 | 491 | 492 | 494 | 499 | 526 | 527 | 529 | 534 |
| | | Lo PR | 119 | 120 | 129 | 140 | 119 | 126 | 135 | 146 | 123 | 131 | 139 | 150 | 127 | 134 | 143 | 154 | 130 | 138 | 147 | 159 | 139 | 147 | 157 | 169 |

IDB = Entering Indoor Dry Bulb Temperature

Shaded area is AHRI conditions

kW = Total system power

High and low pressures are measured at the liquid and suction service valves.

Amps = outdoor unit amps (comp.+fan)

Airflow may vary depending on actual ambient conditions and system operation modes.

# Expanded Cooling Data — DC6VSA181WA * / DFVE24BP1300A *

| | | | Outdoor Ambient Temperature | | | | | | | | | | | | | | | | | | | | | | | |
|---|---|---|---|---|---|---|---|---|---|---|---|---|---|---|---|---|---|---|---|---|---|---|---|---|---|---|
| | | | 65°F | | | | 75°F | | | | 85°F | | | | 95°F | | | | 105°F | | | | 115°F | | | |
| | | | Entering Indoor Wet Bulb Temperature | | | | | | | | | | | | | | | | | | | | | | | |
| IDB | Airflow | | 59 | 63 | 67 | 71 | 59 | 63 | 67 | 71 | 59 | 63 | 67 | 71 | 59 | 63 | 67 | 71 | 59 | 63 | 67 | 71 | 59 | 63 | 67 | 71 |
| 70 | 520 | MBh | 17.8 | 18.6 | 19.1 | | 17.8 | 18.1 | 18.6 | | 17.0 | 17.2 | 17.8 | | 15.8 | 16.1 | 16.6 | | 14.6 | 14.8 | 15.3 | | 13.4 | 13.7 | 14.2 | |
| | | S/T | 0.62 | 0.52 | 0.38 | | 0.60 | 0.52 | 0.38 | | 0.62 | 0.54 | 0.41 | | 0.63 | 0.56 | 0.42 | | 0.65 | 0.58 | 0.44 | | 0.70 | 0.63 | 0.49 | |
| | | ΔT | 22 | 18 | 14 | | 19 | 17 | 14 | | 19 | 17 | 14 | | 18 | 16 | 13 | | 17 | 16 | 13 | | 18 | 16 | 14 | |
| | | kW | 0.85 | 0.93 | 0.93 | | 1.08 | 1.07 | 1.07 | | 1.24 | 1.24 | 1.24 | | 1.43 | 1.43 | 1.43 | | 1.64 | 1.64 | 1.64 | | 1.89 | 1.89 | 1.89 | |
| | | Amps | 3.6 | 3.9 | 3.9 | | 4.4 | 4.4 | 4.4 | | 5.0 | 4.9 | 4.9 | | 5.6 | 5.6 | 5.6 | | 6.5 | 6.5 | 6.5 | | 7.7 | 7.7 | 7.7 | |
| | | Hi PR | 234 | 237 | 238 | | 277 | 278 | 279 | | 321 | 322 | 323 | | 369 | 370 | 371 | | 421 | 423 | 424 | | 479 | 480 | 482 | |
| | | Lo PR | 121 | 122 | 129 | | 125 | 128 | 135 | | 130 | 133 | 141 | | 134 | 137 | 145 | | 137 | 141 | 148 | | 142 | 146 | 153 | |
| | 610 | MBh | 18.6 | 18.9 | 19.4 | | 18.1 | 18.3 | 18.9 | | 17.2 | 17.5 | 18.0 | | 16.1 | 16.4 | 16.9 | | 14.8 | 15.1 | 15.6 | | 13.7 | 13.9 | 14.4 | |
| | | S/T | 0.67 | 0.59 | 0.46 | | 0.67 | 0.59 | 0.46 | | 0.69 | 0.62 | 0.48 | | 0.71 | 0.63 | 0.50 | | 0.73 | 0.65 | 0.52 | | 0.99 | 0.70 | 0.57 | |
| | | ΔT | 18 | 16 | 13 | | 18 | 16 | 13 | | 18 | 16 | 13 | | 17 | 15 | 12 | | 16 | 15 | 12 | | 17 | 15 | 12 | |
| | | kW | 0.94 | 0.94 | 0.93 | | 1.08 | 1.08 | 1.08 | | 1.25 | 1.25 | 1.25 | | 1.44 | 1.44 | 1.43 | | 1.65 | 1.65 | 1.65 | | 1.90 | 1.90 | 1.90 | |
| | | Amps | 3.9 | 3.9 | 3.9 | | 4.4 | 4.4 | 4.4 | | 5.0 | 5.0 | 5.0 | | 5.7 | 5.7 | 5.7 | | 6.6 | 6.5 | 6.5 | | 7.7 | 7.7 | 7.7 | |
| | | Hi PR | 238 | 239 | 241 | | 279 | 280 | 282 | | 323 | 324 | 326 | | 371 | 372 | 374 | | 424 | 425 | 427 | | 481 | 482 | 484 | |
| | | Lo PR | 121 | 124 | 131 | | 127 | 130 | 138 | | 132 | 135 | 143 | | 136 | 139 | 147 | | 139 | 143 | 151 | | 144 | 148 | 156 | |
| | 700 | MBh | 19.0 | 19.2 | 19.8 | | 18.4 | 18.7 | 19.2 | | 17.6 | 17.8 | 18.4 | | 16.4 | 16.7 | 17.2 | | 15.2 | 15.4 | 15.9 | | 14.0 | 14.2 | 14.7 | |
| | | S/T | 0.71 | 0.63 | 0.49 | | 0.71 | 0.63 | 0.50 | | 0.73 | 0.65 | 0.52 | | 0.75 | 0.67 | 0.54 | | 0.76 | 0.69 | 0.56 | | 0.99 | 0.74 | 0.60 | |
| | | ΔT | 17 | 15 | 12 | | 17 | 15 | 12 | | 17 | 15 | 12 | | 16 | 14 | 11 | | 15 | 14 | 11 | | 16 | 14 | 11 | |
| | | kW | 0.94 | 0.94 | 0.94 | | 1.09 | 1.09 | 1.09 | | 1.26 | 1.26 | 1.25 | | 1.44 | 1.44 | 1.44 | | 1.66 | 1.65 | 1.65 | | 1.91 | 1.91 | 1.91 | |
| | | Amps | 4.0 | 3.9 | 3.9 | | 4.4 | 4.4 | 4.4 | | 5.0 | 5.0 | 5.0 | | 5.7 | 5.7 | 5.7 | | 6.6 | 6.6 | 6.6 | | 7.8 | 7.8 | 7.8 | |
| | | Hi PR | 240 | 241 | 243 | | 281 | 283 | 284 | | 325 | 327 | 328 | | 374 | 375 | 376 | | 426 | 428 | 429 | | 484 | 485 | 487 | |
| | | Lo PR | 123 | 127 | 134 | | 129 | 133 | 140 | | 134 | 138 | 145 | | 138 | 142 | 149 | | 142 | 145 | 153 | | 146 | 150 | 158 | |
| 75 | 520 | MBh | 17.8 | 18.6 | 19.1 | 20.0 | 17.8 | 18.1 | 18.6 | 19.4 | 17.0 | 17.2 | 17.8 | 18.6 | 15.9 | 16.1 | 16.6 | 17.4 | 14.6 | 14.8 | 15.3 | 16.1 | 13.4 | 13.7 | 14.2 | 14.9 |
| | | S/T | 0.76 | 0.64 | 0.51 | 0.37 | 0.72 | 0.65 | 0.51 | 0.37 | 0.75 | 0.67 | 0.54 | 0.39 | 1.00 | 0.69 | 0.55 | 0.41 | 1.00 | 0.70 | 0.57 | 0.43 | 0.99 | 0.75 | 0.62 | 0.48 |
| | | ΔT | 26 | 22 | 18 | 15 | 23 | 21 | 18 | 14 | 23 | 21 | 18 | 14 | 22 | 20 | 17 | 14 | 21 | 19 | 16 | 13 | 22 | 20 | 17 | 14 |
| | | kW | 0.85 | 0.93 | 0.93 | 0.93 | 1.07 | 1.07 | 1.07 | 1.08 | 1.24 | 1.24 | 1.24 | 1.25 | 1.43 | 1.43 | 1.42 | 1.43 | 1.64 | 1.64 | 1.64 | 1.65 | 1.89 | 1.89 | 1.89 | 1.90 |
| | | Amps | 3.6 | 3.9 | 3.9 | 3.9 | 4.4 | 4.4 | 4.4 | 4.4 | 4.9 | 4.9 | 4.9 | 5.0 | 5.6 | 5.6 | 5.6 | 5.7 | 6.5 | 6.5 | 6.5 | 6.5 | 7.7 | 7.7 | 7.7 | 7.7 |
| | | Hi PR | 234 | 237 | 238 | 243 | 277 | 278 | 280 | 284 | 321 | 322 | 324 | 328 | 369 | 370 | 372 | 376 | 422 | 423 | 424 | 429 | 479 | 480 | 482 | 486 |
| | | Lo PR | 121 | 122 | 129 | 141 | 125 | 128 | 135 | 147 | 130 | 133 | 141 | 153 | 134 | 137 | 145 | 157 | 137 | 141 | 148 | 161 | 142 | 146 | 154 | 166 |
| | 610 | MBh | 18.6 | 18.9 | 19.4 | 20.3 | 18.1 | 18.3 | 18.9 | 19.7 | 17.3 | 17.5 | 18.0 | 18.8 | 16.1 | **16.4** | 16.9 | 17.7 | 14.9 | 15.1 | 15.6 | 16.4 | 13.7 | 13.9 | 14.4 | 15.2 |
| | | S/T | 0.80 | 0.72 | 0.58 | 0.44 | 0.80 | 0.72 | 0.59 | 0.45 | 0.82 | 0.75 | 0.61 | 0.47 | 1.00 | **0.76** | 0.63 | 0.49 | 1.00 | 0.78 | 0.65 | 0.50 | 0.99 | 0.83 | 0.69 | 0.55 |
| | | ΔT | 22 | 20 | 17 | 14 | 22 | 20 | 17 | 13 | 21 | 20 | 16 | 13 | 21 | **19** | 16 | 13 | 20 | 18 | 15 | 12 | 20 | 19 | 16 | 13 |
| | | kW | 0.94 | 0.93 | 0.93 | 0.94 | 1.08 | 1.08 | 1.08 | 1.09 | 1.25 | 1.25 | 1.25 | 1.26 | 1.44 | **1.43** | 1.43 | 1.44 | 1.65 | 1.65 | 1.65 | 1.66 | 1.90 | 1.90 | 1.90 | 1.91 |
| | | Amps | 3.9 | 3.9 | 3.9 | 3.9 | 4.4 | 4.4 | 4.4 | 4.4 | 5.0 | 5.0 | 5.0 | 5.0 | 5.7 | **5.7** | 5.7 | 5.7 | 6.6 | 6.5 | 6.5 | 6.6 | 7.7 | 7.7 | 7.7 | 7.8 |
| | | Hi PR | 238 | 239 | 241 | 245 | 279 | 280 | 282 | 286 | 323 | 324 | 326 | 330 | 371 | **372** | 374 | 379 | 424 | 425 | 427 | 431 | 482 | 483 | 484 | 489 |
| | | Lo PR | 121 | 124 | 131 | 143 | 127 | 130 | 138 | 150 | 132 | 135 | 143 | 155 | 136 | **139** | 147 | 159 | 139 | 143 | 151 | 163 | 144 | 148 | 156 | 168 |
| | 700 | MBh | 19.0 | 19.2 | 19.8 | 20.6 | 18.4 | 18.7 | 19.2 | 20.0 | 17.6 | 17.8 | 18.4 | 19.2 | 16.5 | 16.7 | 17.2 | 18.0 | 15.2 | 15.4 | 15.9 | 16.7 | 14.0 | 14.3 | 14.8 | 15.5 |
| | | S/T | 0.83 | 0.76 | 0.62 | 0.48 | 0.84 | 0.76 | 0.63 | 0.48 | 1.01 | 0.78 | 0.65 | 0.51 | 1.00 | 0.80 | 0.66 | 0.52 | 1.00 | 0.82 | 0.68 | 0.54 | 0.99 | 0.86 | 0.73 | 0.59 |
| | | ΔT | 21 | 19 | 16 | 12 | 20 | 19 | 15 | 12 | 20 | 19 | 15 | 12 | 20 | 18 | 15 | 12 | 19 | 17 | 14 | 11 | 19 | 18 | 15 | 12 |
| | | kW | 0.94 | 0.94 | 0.94 | 0.95 | 1.09 | 1.09 | 1.09 | 1.09 | 1.26 | 1.25 | 1.25 | 1.26 | 1.44 | 1.44 | 1.44 | 1.45 | 1.66 | 1.65 | 1.65 | 1.66 | 1.91 | 1.91 | 1.90 | 1.91 |
| | | Amps | 3.9 | 3.9 | 3.9 | 4.0 | 4.4 | 4.4 | 4.4 | 4.4 | 5.0 | 5.0 | 5.0 | 5.0 | 5.7 | 5.7 | 5.7 | 5.7 | 6.6 | 6.6 | 6.6 | 6.6 | 7.8 | 7.8 | 7.8 | 7.8 |
| | | Hi PR | 241 | 242 | 243 | 247 | 282 | 283 | 284 | 289 | 326 | 327 | 328 | 333 | 374 | 375 | 377 | 381 | 427 | 428 | 430 | 434 | 484 | 485 | 487 | 491 |
| | | Lo PR | 123 | 127 | 134 | 146 | 129 | 133 | 140 | 152 | 134 | 138 | 145 | 157 | 138 | 142 | 149 | 161 | 142 | 145 | 153 | 165 | 147 | 150 | 158 | 171 |

IDB = Entering Indoor Dry Bulb Temperature
High and low pressures are measured at the liquid and suction service valves.
Airflow may vary depending on actual ambient conditions and system operation modes.

Shaded area is ACCA (TVA) conditions

kW = Total system power
Amps = outdoor unit amps (comp.+fan)

| | | | Outdoor Ambient Temperature | | | | | | | | | | | | | | | | | | | | | | | |
|---|---|---|---|---|---|---|---|---|---|---|---|---|---|---|---|---|---|---|---|---|---|---|---|---|---|---|
| | | | 65°F | | | | 75°F | | | | 85°F | | | | 95°F | | | | 105°F | | | | 115°F | | | |
| | | | Entering Indoor Wet Bulb Temperature | | | | | | | | | | | | | | | | | | | | | | | |
| IDB | Airflow | | 59 | 63 | 67 | 71 | 59 | 63 | 67 | 71 | 59 | 63 | 67 | 71 | 59 | 63 | 67 | 71 | 59 | 63 | 67 | 71 | 59 | 63 | 67 | 71 |
| 80 | 520 | MBh | 18.4 | 18.7 | 19.2 | 20.1 | 17.9 | 18.2 | 18.7 | 19.5 | 17.1 | 17.3 | 17.9 | 18.7 | 15.9 | 16.2 | 16.7 | 17.5 | 14.7 | 14.9 | 15.4 | 16.2 | 13.5 | 13.8 | 14.3 | 15.0 |
| | | S/T | 0.85 | 0.77 | 0.63 | 0.49 | 1.01 | 0.77 | 0.64 | 0.50 | 1.01 | 0.79 | 0.66 | 0.52 | 1.00 | 0.81 | 0.68 | 0.53 | 1.00 | 0.83 | 0.69 | 0.55 | 0.99 | 0.99 | 0.74 | 0.60 |
| | | ΔT | 27 | 26 | 22 | 19 | 27 | 25 | 22 | 18 | 26 | 25 | 21 | 18 | 25 | 24 | 21 | 17 | 25 | 23 | 20 | 17 | 25 | 23 | 21 | 17 |
| | | kW | 0.93 | 0.93 | 0.93 | 0.93 | 1.07 | 1.07 | 1.07 | 1.08 | 1.24 | 1.24 | 1.24 | 1.25 | 1.43 | 1.43 | 1.43 | 1.43 | 1.64 | 1.64 | 1.64 | 1.65 | 1.89 | 1.89 | 1.89 | 1.90 |
| | | Amps | 3.9 | 3.9 | 3.9 | 3.9 | 4.4 | 4.4 | 4.4 | 4.4 | 5.0 | 4.9 | 4.9 | 5.0 | 5.6 | 5.6 | 5.6 | 5.7 | 6.5 | 6.5 | 6.5 | 6.5 | 7.7 | 7.7 | 7.7 | 7.7 |
| | | Hi PR | 236 | 237 | 239 | 243 | 277 | 278 | 280 | 284 | 321 | 322 | 324 | 328 | 369 | 370 | 372 | 376 | 422 | 423 | 425 | 429 | 479 | 480 | 482 | 487 |
| | | Lo PR | 119 | 123 | 130 | 141 | 125 | 129 | 136 | 148 | 130 | 134 | 141 | 153 | 134 | 138 | 145 | 157 | 138 | 141 | 149 | 161 | 143 | 146 | 154 | 166 |
| | 610 | MBh | 18.7 | 19.0 | 19.5 | 20.4 | 18.2 | 18.4 | 19.0 | 19.8 | 17.3 | 17.6 | 18.1 | 18.9 | 16.2 | 16.5 | **17.1** | 17.8 | 14.9 | 15.2 | 15.7 | 16.5 | 13.8 | 14.0 | 14.5 | 15.3 |
| | | S/T | 0.92 | 0.85 | 0.71 | 0.57 | 1.01 | 0.85 | 0.71 | 0.57 | 1.01 | 0.87 | 0.73 | 0.59 | 1.00 | 0.88 | **0.75** | 0.61 | 1.00 | 0.90 | 0.77 | 0.63 | 0.99 | 0.99 | 0.82 | 0.68 |
| | | ΔT | 26 | 24 | 21 | 17 | 25 | 24 | 20 | 17 | 25 | 23 | 20 | 17 | 24 | 23 | **20** | 16 | 23 | 22 | 19 | 16 | 24 | 22 | 19 | 16 |
| | | kW | 0.94 | 0.94 | 0.93 | 0.94 | 1.08 | 1.08 | 1.08 | 1.09 | 1.25 | 1.25 | 1.25 | 1.26 | 1.44 | 1.44 | **1.43** | 1.44 | 1.65 | 1.65 | 1.65 | 1.66 | 1.90 | 1.90 | 1.90 | 1.91 |
| | | Amps | 3.9 | 3.9 | 3.9 | 4.0 | 4.4 | 4.4 | 4.4 | 4.4 | 5.0 | 5.0 | 5.0 | 5.0 | 5.7 | 5.7 | **5.7** | 5.7 | 6.6 | 6.5 | 6.5 | 6.6 | 7.7 | 7.7 | 7.7 | 7.8 |
| | | Hi PR | 239 | 240 | 241 | 245 | 280 | 281 | 282 | 287 | 324 | 325 | 326 | 331 | 372 | 373 | **375** | 379 | 425 | 426 | 428 | 432 | 482 | 483 | 485 | 489 |
| | | Lo PR | 121 | 125 | 132 | 144 | 127 | 131 | 138 | 150 | 132 | 136 | 143 | 155 | 136 | 140 | **150** | 160 | 140 | 144 | 151 | 163 | 145 | 148 | 156 | 169 |
| | 700 | MBh | 19.1 | 19.3 | 19.9 | 20.7 | 18.5 | 18.8 | 19.3 | 20.1 | 17.7 | 17.9 | 18.5 | 19.3 | 16.5 | 16.8 | 17.3 | 18.1 | 15.3 | 15.5 | 16.0 | 16.8 | 14.1 | 14.3 | 14.8 | 15.6 |
| | | S/T | 1.01 | 0.88 | 0.75 | 0.61 | 1.01 | 0.89 | 0.75 | 0.61 | 1.01 | 0.91 | 0.77 | 0.63 | 1.00 | 0.92 | 0.79 | 0.65 | 1.00 | 1.00 | 0.81 | 0.67 | 0.99 | 0.99 | 0.85 | 0.71 |
| | | ΔT | 25 | 23 | 20 | 16 | 24 | 23 | 19 | 16 | 24 | 22 | 19 | 16 | 23 | 22 | 18 | 15 | 22 | 21 | 18 | 15 | 23 | 21 | 18 | 15 |
| | | kW | 0.94 | 0.94 | 0.94 | 0.95 | 1.09 | 1.09 | 1.09 | 1.10 | 1.26 | 1.26 | 1.25 | 1.26 | 1.44 | 1.44 | 1.44 | 1.45 | 1.66 | 1.65 | 1.65 | 1.66 | 1.91 | 1.91 | 1.91 | 1.92 |
| | | Amps | 4.0 | 3.9 | 3.9 | 4.0 | 4.4 | 4.4 | 4.4 | 4.4 | 5.0 | 5.0 | 5.0 | 5.0 | 5.7 | 5.7 | 5.7 | 5.7 | 6.6 | 6.6 | 6.6 | 6.6 | 7.8 | 7.8 | 7.8 | 7.8 |
| | | Hi PR | 241 | 242 | 244 | 248 | 282 | 283 | 285 | 289 | 326 | 327 | 329 | 333 | 374 | 375 | 377 | 381 | 427 | 428 | 430 | 434 | 484 | 486 | 487 | 492 |
| | | Lo PR | 124 | 127 | 134 | 146 | 130 | 133 | 141 | 153 | 135 | 138 | 146 | 158 | 139 | 142 | 150 | 162 | 142 | 146 | 153 | 166 | 147 | 151 | 158 | 171 |
| 85 | 520 | MBh | 18.7 | 19.0 | 19.5 | 20.4 | 18.2 | 18.5 | 19.0 | 19.8 | 17.4 | 17.6 | 18.1 | 19.0 | 16.2 | 16.5 | 17.0 | 17.8 | 15.0 | 15.2 | 15.7 | 16.5 | 13.8 | 14.0 | 14.5 | 15.3 |
| | | S/T | 1.01 | 0.87 | 0.74 | 0.59 | 1.01 | 0.87 | 0.74 | 0.60 | 1.01 | 1.01 | 0.76 | 0.62 | 1.00 | 1.00 | 0.78 | 0.63 | 1.00 | 1.00 | 0.79 | 0.65 | 0.99 | 0.99 | 0.84 | 0.70 |
| | | ΔT | 31 | 29 | 26 | 22 | 30 | 28 | 25 | 22 | 30 | 28 | 25 | 21 | 29 | 27 | 24 | 21 | 28 | 26 | 23 | 20 | 28 | 27 | 24 | 21 |
| | | kW | 0.93 | 0.93 | 0.93 | 0.94 | 1.08 | 1.08 | 1.07 | 1.08 | 1.24 | 1.24 | 1.24 | 1.25 | 1.43 | 1.43 | 1.43 | 1.44 | 1.64 | 1.64 | 1.64 | 1.65 | 1.90 | 1.89 | 1.89 | 1.90 |
| | | Amps | 3.9 | 3.9 | 3.9 | 3.9 | 4.4 | 4.4 | 4.4 | 4.4 | 5.0 | 5.0 | 4.9 | 5.0 | 5.6 | 5.6 | 5.6 | 5.7 | 6.5 | 6.5 | 6.5 | 6.6 | 7.7 | 7.7 | 7.7 | 7.7 |
| | | Hi PR | 237 | 238 | 240 | 244 | 278 | 279 | 281 | 285 | 322 | 323 | 325 | 329 | 371 | 372 | 373 | 378 | 423 | 424 | 426 | 430 | 481 | 482 | 483 | 488 |
| | | Lo PR | 121 | 125 | 132 | 143 | 127 | 131 | 138 | 150 | 132 | 136 | 143 | 155 | 136 | 140 | 147 | 159 | 140 | 143 | 151 | 163 | 144 | 148 | 156 | 168 |
| | 610 | MBh | 19.0 | 19.3 | 19.8 | 20.7 | 18.5 | 18.7 | 19.3 | 20.1 | 17.6 | 17.9 | 18.4 | 19.2 | 16.5 | 16.7 | 17.3 | 18.1 | 15.2 | 15.5 | 16.0 | 16.7 | 14.1 | 14.3 | 14.8 | 15.5 |
| | | S/T | 1.01 | 0.95 | 0.81 | 0.67 | 1.01 | 0.95 | 0.81 | 0.67 | 1.01 | 1.01 | 0.84 | 0.69 | 1.00 | 1.00 | 0.85 | 0.71 | 1.00 | 1.00 | 0.87 | 0.73 | 0.99 | 0.99 | 0.92 | 0.78 |
| | | ΔT | 29 | 28 | 24 | 21 | 29 | 27 | 24 | 20 | 28 | 27 | 23 | 20 | 27 | 26 | 23 | 20 | 27 | 25 | 22 | 19 | 27 | 25 | 22 | 19 |
| | | kW | 0.94 | 0.94 | 0.94 | 0.94 | 1.08 | 1.08 | 1.08 | 1.09 | 1.25 | 1.25 | 1.25 | 1.26 | 1.44 | 1.44 | 1.44 | 1.45 | 1.65 | 1.65 | 1.65 | 1.66 | 1.90 | 1.90 | 1.90 | 1.91 |
| | | Amps | 3.9 | 3.9 | 3.9 | 4.0 | 4.4 | 4.4 | 4.4 | 4.4 | 5.0 | 5.0 | 5.0 | 5.0 | 5.7 | 5.7 | 5.7 | 5.7 | 6.6 | 6.6 | 6.5 | 6.6 | 7.8 | 7.8 | 7.7 | 7.8 |
| | | Hi PR | 240 | 241 | 242 | 247 | 281 | 282 | 284 | 288 | 325 | 326 | 328 | 332 | 373 | 374 | 376 | 380 | 426 | 427 | 429 | 433 | 483 | 484 | 486 | 490 |
| | | Lo PR | 123 | 127 | 134 | 146 | 129 | 133 | 140 | 152 | 134 | 138 | 145 | 157 | 138 | 142 | 149 | 161 | 142 | 145 | 153 | 165 | 146 | 150 | 158 | 171 |
| | 700 | MBh | 19.4 | 19.6 | 20.2 | 21.0 | 18.8 | 19.1 | 19.6 | 20.4 | 18.0 | 18.2 | 18.8 | 19.6 | 16.8 | 17.1 | 17.6 | 18.4 | 15.6 | 15.8 | 16.3 | 17.1 | 14.4 | 14.6 | 15.1 | 15.9 |
| | | S/T | 1.01 | 0.99 | 0.85 | 0.71 | 1.01 | 0.99 | 0.85 | 0.71 | 1.01 | 1.01 | 0.87 | 0.73 | 1.00 | 1.00 | 0.89 | 0.75 | 1.00 | 1.00 | 0.91 | 0.77 | 0.99 | 0.99 | 0.99 | 0.81 |
| | | ΔT | 28 | 27 | 23 | 20 | 28 | 26 | 23 | 19 | 27 | 26 | 22 | 19 | 26 | 25 | 22 | 19 | 26 | 24 | 21 | 18 | 26 | 24 | 21 | 18 |
| | | kW | 0.94 | 0.94 | 0.94 | 0.95 | 1.09 | 1.09 | 1.09 | 1.10 | 1.26 | 1.26 | 1.26 | 1.27 | 1.45 | 1.44 | 1.44 | 1.45 | 1.66 | 1.66 | 1.66 | 1.66 | 1.91 | 1.91 | 1.91 | 1.92 |
| | | Amps | 4.0 | 4.0 | 3.9 | 4.0 | 4.4 | 4.4 | 4.4 | 4.5 | 5.0 | 5.0 | 5.0 | 5.0 | 5.7 | 5.7 | 5.7 | 5.7 | 6.6 | 6.6 | 6.6 | 6.6 | 7.8 | 7.8 | 7.8 | 7.8 |
| | | Hi PR | 242 | 243 | 245 | 249 | 283 | 284 | 286 | 290 | 327 | 328 | 330 | 334 | 375 | 377 | 378 | 383 | 428 | 429 | 431 | 435 | 486 | 487 | 489 | 493 |
| | | Lo PR | 126 | 129 | 136 | 148 | 132 | 135 | 142 | 155 | 136 | 140 | 148 | 160 | 140 | 144 | 152 | 164 | 144 | 148 | 155 | 168 | 149 | 152 | 160 | 173 |

IDB = Entering Indoor Dry Bulb Temperature

Shaded area is AHRI conditions

kW = Total system power

High and low pressures are measured at the liquid and suction service valves.

Amps = outdoor unit amps (comp.+fan)

Airflow may vary depending on actual ambient conditions and system operation modes.

# Expanded Cooling Data — DC6VSA241WA * / DFVE24BP1300A *

| | | | Outdoor Ambient Temperature | | | | | | | | | | | | | | | | | | | | | | | |
|---|---|---|---|---|---|---|---|---|---|---|---|---|---|---|---|---|---|---|---|---|---|---|---|---|---|---|
| | | | 65°F | | | | 75°F | | | | 85°F | | | | 95°F | | | | 105°F | | | | 115°F | | | |
| | | | Entering Indoor Wet Bulb Temperature | | | | | | | | | | | | | | | | | | | | | | | |
| IDB | Airflow | | 59 | 63 | 67 | 71 | 59 | 63 | 67 | 71 | 59 | 63 | 67 | 71 | 59 | 63 | 67 | 71 | 59 | 63 | 67 | 71 | 59 | 63 | 67 | 71 |
| 70 | 680 | MBh | 20.3 | 25.6 | 26.3 | | 24.4 | 24.7 | 25.5 | | 23.1 | 23.5 | 24.2 | | 21.5 | 21.8 | 22.5 | | 19.7 | 20.0 | 20.7 | | 18.0 | 18.3 | 19.0 | |
| | | S/T | 0.63 | 0.51 | 0.37 | | 0.59 | 0.51 | 0.38 | | 0.61 | 0.53 | 0.40 | | 0.63 | 0.55 | 0.42 | | 0.64 | 0.57 | 0.44 | | 0.69 | 0.62 | 0.49 | |
| | | ΔT | 22 | 19 | 15 | | 20 | 18 | 15 | | 20 | 18 | 15 | | 19 | 17 | 14 | | 18 | 16 | 13 | | 19 | 17 | 14 | |
| | | kW | 1.09 | 1.57 | 1.56 | | 1.78 | 1.78 | 1.78 | | 2.02 | 2.02 | 2.01 | | 2.28 | 2.27 | 2.27 | | 2.57 | 2.56 | 2.56 | | 2.91 | 2.90 | 2.90 | |
| | | Amps | 4.4 | 6.0 | 6.0 | | 6.8 | 6.8 | 6.8 | | 7.8 | 7.8 | 7.8 | | 8.9 | 8.9 | 8.9 | | 10.0 | 10.0 | 9.9 | | 10.1 | 10.2 | 10.2 | |
| | | Hi PR | 243 | 261 | 263 | | 303 | 304 | 306 | | 349 | 350 | 352 | | 399 | 401 | 402 | | 454 | 455 | 457 | | 513 | 514 | 516 | |
| | | Lo PR | 120 | 119 | 126 | | 121 | 125 | 132 | | 126 | 130 | 138 | | 130 | 134 | 141 | | 133 | 137 | 145 | | 138 | 142 | 150 | |
| | 800 | MBh | 23.2 | 26.0 | 26.7 | | 24.8 | 25.1 | 25.8 | | 23.5 | 23.8 | 24.6 | | 21.8 | 22.2 | 22.9 | | 20.0 | 20.3 | 21.0 | | 18.3 | 18.7 | 19.3 | |
| | | S/T | 0.69 | 0.58 | 0.45 | | 0.66 | 0.59 | 0.45 | | 0.68 | 0.61 | 0.48 | | 0.70 | 0.62 | 0.49 | | 0.72 | 0.64 | 0.51 | | 0.76 | 0.69 | 0.56 | |
| | | ΔT | 21 | 17 | 14 | | 19 | 17 | 13 | | 18 | 17 | 13 | | 18 | 16 | 13 | | 17 | 15 | 12 | | 17 | 16 | 13 | |
| | | kW | 1.28 | 1.58 | 1.58 | | 1.79 | 1.79 | 1.79 | | 2.03 | 2.03 | 2.03 | | 2.29 | 2.29 | 2.28 | | 2.58 | 2.58 | 2.57 | | 2.92 | 2.92 | 2.91 | |
| | | Amps | 5.0 | 6.0 | 6.0 | | 6.9 | 6.9 | 6.8 | | 7.9 | 7.9 | 7.9 | | 9.0 | 9.0 | 9.0 | | 10.0 | 10.0 | 10.0 | | 10.1 | 10.1 | 10.1 | |
| | | Hi PR | 251 | 263 | 265 | | 306 | 307 | 309 | | 352 | 353 | 355 | | 402 | 403 | 405 | | 457 | 458 | 460 | | 516 | 517 | 519 | |
| | | Lo PR | 120 | 121 | 129 | | 123 | 127 | 135 | | 128 | 132 | 140 | | 131 | 136 | 144 | | 135 | 139 | 147 | | 140 | 144 | 152 | |
| | 920 | MBh | 26.1 | 26.5 | 27.2 | | 25.2 | 25.6 | 26.3 | | 24.0 | 24.3 | 25.0 | | 22.3 | 22.6 | 23.3 | | 20.4 | 20.8 | 21.4 | | 18.8 | 19.1 | 19.7 | |
| | | S/T | 0.70 | 0.62 | 0.49 | | 0.70 | 0.62 | 0.49 | | 0.72 | 0.65 | 0.51 | | 0.74 | 0.66 | 0.53 | | 0.75 | 0.68 | 0.55 | | 0.80 | 0.73 | 0.60 | |
| | | ΔT | 18 | 16 | 13 | | 17 | 16 | 12 | | 17 | 15 | 12 | | 16 | 15 | 12 | | 16 | 14 | 11 | | 16 | 15 | 12 | |
| | | kW | 1.59 | 1.59 | 1.59 | | 1.80 | 1.80 | 1.80 | | 2.04 | 2.04 | 2.04 | | 2.30 | 2.30 | 2.29 | | 2.59 | 2.59 | 2.58 | | 2.93 | 2.93 | 2.92 | |
| | | Amps | 6.1 | 6.1 | 6.1 | | 6.9 | 6.9 | 6.9 | | 7.9 | 7.9 | 7.9 | | 9.1 | 9.0 | 9.0 | | 10.0 | 10.0 | 10.0 | | 10.1 | 10.1 | 10.1 | |
| | | Hi PR | 265 | 266 | 268 | | 308 | 310 | 311 | | 355 | 356 | 358 | | 405 | 406 | 408 | | 459 | 461 | 463 | | 518 | 520 | 522 | |
| | | Lo PR | 119 | 124 | 131 | | 125 | 129 | 137 | | 130 | 134 | 142 | | 134 | 138 | 146 | | 137 | 142 | 150 | | 142 | 146 | 154 | |
| 75 | 680 | MBh | 20.3 | 25.6 | 26.3 | 27.5 | 24.4 | 24.7 | 25.5 | 26.6 | 23.1 | 23.5 | 24.2 | 25.3 | 21.5 | 21.8 | 22.5 | 23.6 | 19.7 | 20.0 | 20.7 | 21.7 | 18.0 | 18.3 | 19.0 | 20.0 |
| | | S/T | 0.77 | 0.64 | 0.50 | 0.36 | 0.71 | 0.64 | 0.51 | 0.36 | 0.74 | 0.66 | 0.53 | 0.39 | 0.75 | 0.68 | 0.54 | 0.41 | 0.77 | 0.70 | 0.56 | 0.42 | 0.99 | 0.74 | 0.61 | 0.47 |
| | | ΔT | 26 | 23 | 19 | 16 | 24 | 22 | 19 | 15 | 24 | 22 | 18 | 15 | 23 | 21 | 18 | 14 | 22 | 20 | 17 | 14 | 22 | 20 | 17 | 14 |
| | | kW | 1.09 | 1.57 | 1.56 | 1.58 | 1.78 | 1.78 | 1.77 | 1.79 | 2.02 | 2.01 | 2.01 | 2.03 | 2.27 | 2.27 | 2.27 | 2.29 | 2.56 | 2.56 | 2.56 | 2.57 | 2.90 | 2.90 | 2.90 | 2.91 |
| | | Amps | 4.4 | 6.0 | 6.0 | 6.0 | 6.8 | 6.8 | 6.8 | 6.8 | 7.8 | 7.8 | 7.8 | 7.9 | 8.9 | 8.9 | 8.9 | 9.0 | 10.0 | 9.9 | 9.9 | 10.0 | 10.2 | 10.2 | 10.2 | 10.1 |
| | | Hi PR | 244 | 261 | 263 | 267 | 303 | 304 | 306 | 311 | 349 | 351 | 352 | 357 | 400 | 401 | 403 | 407 | 454 | 455 | 457 | 462 | 513 | 514 | 516 | 521 |
| | | Lo PR | 120 | 119 | 126 | 138 | 121 | 125 | 133 | 144 | 126 | 130 | 138 | 149 | 130 | 134 | 142 | 153 | 133 | 138 | 145 | 157 | 138 | 142 | 150 | 162 |
| | 800 | MBh | 23.2 | 26.0 | 26.7 | 27.9 | 24.8 | 25.1 | 25.9 | 27.0 | 23.5 | 23.9 | 24.6 | 25.7 | 21.9 | **22.2** | 22.9 | 24.0 | 20.0 | 20.3 | 21.0 | 22.1 | 18.4 | 18.7 | 19.3 | 20.3 |
| | | S/T | 0.83 | 0.71 | 0.58 | 0.44 | 0.79 | 0.71 | 0.58 | 0.44 | 0.81 | 0.73 | 0.60 | 0.46 | 0.82 | **0.75** | 0.62 | 0.48 | 1.00 | 0.77 | 0.64 | 0.50 | 0.99 | 0.82 | 0.68 | 0.55 |
| | | ΔT | 25 | 21 | 18 | 14 | 23 | 21 | 17 | 14 | 22 | 20 | 17 | 14 | 21 | **20** | 16 | 13 | 20 | 19 | 16 | 12 | 21 | 19 | 16 | 13 |
| | | kW | 1.28 | 1.58 | 1.58 | 1.59 | 1.79 | 1.79 | 1.79 | 1.80 | 2.03 | 2.03 | 2.02 | 2.04 | 2.29 | **2.29** | 2.28 | 2.30 | 2.58 | 2.58 | 2.57 | 2.59 | 2.92 | 2.92 | 2.91 | 2.93 |
| | | Amps | 5.0 | 6.0 | 6.0 | 6.1 | 6.9 | 6.8 | 6.8 | 6.9 | 7.9 | 7.9 | 7.8 | 7.9 | 9.0 | **9.0** | 9.0 | 9.0 | 10.0 | 10.0 | 10.0 | 10.0 | 10.1 | 10.1 | 10.1 | 10.1 |
| | | Hi PR | 251 | 264 | 265 | 270 | 306 | 307 | 309 | 314 | 352 | 353 | 355 | 360 | 402 | **403** | 405 | 410 | 457 | 458 | 460 | 465 | 516 | 517 | 519 | 524 |
| | | Lo PR | 120 | 121 | 129 | 140 | 123 | 127 | 135 | 146 | 128 | 132 | 140 | 151 | 132 | **136** | 144 | 155 | 135 | 140 | 147 | 159 | 140 | 144 | 152 | 164 |
| | 920 | MBh | 26.1 | 26.5 | 27.2 | 28.4 | 25.2 | 25.6 | 26.3 | 27.5 | 24.0 | 24.3 | 25.0 | 26.1 | 22.3 | 22.6 | 23.3 | 24.4 | 20.5 | 20.8 | 21.5 | 22.5 | 18.8 | 19.1 | 19.8 | 20.8 |
| | | S/T | 0.82 | 0.75 | 0.61 | 0.47 | 0.83 | 0.75 | 0.62 | 0.48 | 0.85 | 0.77 | 0.64 | 0.50 | 1.00 | 0.79 | 0.66 | 0.52 | 1.00 | 0.81 | 0.67 | 0.54 | 0.99 | 0.85 | 0.72 | 0.58 |
| | | ΔT | 22 | 20 | 17 | 13 | 21 | 20 | 16 | 13 | 21 | 19 | 16 | 13 | 20 | 19 | 15 | 12 | 19 | 18 | 15 | 11 | 20 | 18 | 15 | 12 |
| | | kW | 1.59 | 1.59 | 1.59 | 1.60 | 1.80 | 1.80 | 1.80 | 1.81 | 2.04 | 2.04 | 2.04 | 2.05 | 2.30 | 2.30 | 2.29 | 2.31 | 2.59 | 2.59 | 2.58 | 2.60 | 2.93 | 2.93 | 2.92 | 2.94 |
| | | Amps | 6.1 | 6.1 | 6.1 | 6.1 | 6.9 | 6.9 | 6.9 | 7.0 | 7.9 | 7.9 | 7.9 | 8.0 | 9.0 | 9.0 | 9.0 | 9.1 | 10.0 | 10.0 | 10.0 | 10.1 | 10.1 | 10.1 | 10.1 | 10.1 |
| | | Hi PR | 265 | 266 | 268 | 273 | 309 | 310 | 312 | 316 | 355 | 356 | 358 | 362 | 405 | 406 | 408 | 413 | 460 | 461 | 463 | 467 | 519 | 520 | 522 | 526 |
| | | Lo PR | 119 | 124 | 131 | 142 | 125 | 129 | 137 | 149 | 130 | 134 | 142 | 154 | 134 | 138 | 146 | 158 | 137 | 142 | 150 | 162 | 142 | 147 | 154 | 167 |

IDB = Entering Indoor Dry Bulb Temperature

Shaded area is ACCA (TVA) conditions

kW = Total system power

High and low pressures are measured at the liquid and suction service valves.

Amps = outdoor unit amps (comp.+fan)

Airflow may vary depending on actual ambient conditions and system operation modes.

## Expanded Cooling Data — DC6VSA241WA* / DFVE24BP1300A* (cont.)

| | | | Outdoor Ambient Temperature | | | | | | | | | | | | | | | | | | | | | | | |
|---|---|---|---|---|---|---|---|---|---|---|---|---|---|---|---|---|---|---|---|---|---|---|---|---|---|---|
| | | | 65°F | | | | 75°F | | | | 85°F | | | | 95°F | | | | 105°F | | | | 115°F | | | |
| | | | Entering Indoor Wet Bulb Temperature | | | | | | | | | | | | | | | | | | | | | | | |
| IDB | Airflow | | 59 | 63 | 67 | 71 | 59 | 63 | 67 | 71 | 59 | 63 | 67 | 71 | 59 | 63 | 67 | 71 | 59 | 63 | 67 | 71 | 59 | 63 | 67 | 71 |
| 80 | 680 | MBh | 21.9 | 25.7 | 26.5 | 27.6 | 24.5 | 24.9 | 25.6 | 26.7 | 23.3 | 23.6 | 24.3 | 25.4 | 21.6 | 21.9 | 22.6 | 23.7 | 19.8 | 20.1 | 20.8 | 21.8 | 18.1 | 18.4 | 19.1 | 20.1 |
| | | S/T | 0.89 | 0.76 | 0.63 | 0.48 | 0.84 | 0.76 | 0.63 | 0.49 | 1.01 | 0.78 | 0.65 | 0.51 | 1.00 | 0.80 | 0.67 | 0.53 | 1.00 | 0.82 | 0.69 | 0.55 | 0.99 | 0.86 | 0.73 | 0.59 |
| | | ΔT | 31 | 27 | 23 | 20 | 28 | 26 | 23 | 19 | 27 | 26 | 22 | 19 | 26 | 25 | 21 | 18 | 25 | 24 | 21 | 17 | 26 | 24 | 21 | 18 |
| | | kW | 1.19 | 1.57 | 1.56 | 1.58 | 1.78 | 1.78 | 1.78 | 1.79 | 2.02 | 2.02 | 2.01 | 2.03 | 2.28 | 2.27 | 2.27 | 2.29 | 2.56 | 2.56 | 2.56 | 2.58 | 2.90 | 2.90 | 2.90 | 2.92 |
| | | Amps | 4.7 | 6.0 | 6.0 | 6.0 | 6.8 | 6.8 | 6.8 | 6.9 | 7.8 | 7.8 | 7.8 | 7.9 | 8.9 | 8.9 | 8.9 | 9.0 | 10.0 | 10.0 | 9.9 | 10.0 | 10.2 | 10.2 | 10.2 | 10.1 |
| | | Hi PR | 247 | 261 | 263 | 268 | 304 | 305 | 307 | 311 | 350 | 351 | 353 | 358 | 400 | 401 | 403 | 408 | 455 | 456 | 458 | 462 | 514 | 515 | 517 | 522 |
| | | Lo PR | 120 | 120 | 127 | 138 | 121 | 126 | 133 | 144 | 126 | 131 | 138 | 150 | 130 | 134 | 142 | 154 | 134 | 138 | 146 | 158 | 138 | 143 | 151 | 163 |
| | 800 | MBh | 25.2 | 26.1 | 26.9 | 28.0 | 24.9 | 25.2 | 26.0 | 27.1 | 23.6 | 24.0 | 24.7 | 25.8 | 22.0 | 22.3 | **23.2** | 24.1 | 20.1 | 20.5 | 21.1 | 22.2 | 18.5 | 18.8 | 19.4 | 20.5 |
| | | S/T | 0.95 | 0.83 | 0.70 | 0.56 | 1.01 | 0.84 | 0.70 | 0.56 | 1.01 | 0.86 | 0.72 | 0.58 | 1.00 | 0.87 | **0.74** | 0.60 | 1.00 | 0.89 | 0.76 | 0.62 | 0.99 | 0.94 | 0.81 | 0.67 |
| | | ΔT | 30 | 25 | 22 | 18 | 27 | 25 | 21 | 18 | 26 | 24 | 21 | 18 | 25 | 23 | **20** | 17 | 24 | 23 | 19 | 16 | 25 | 23 | 20 | 17 |
| | | kW | 1.42 | 1.58 | 1.58 | 1.59 | 1.79 | 1.79 | 1.79 | 1.80 | 2.03 | 2.03 | 2.03 | 2.04 | 2.29 | 2.29 | **2.27** | 2.30 | 2.58 | 2.58 | 2.57 | 2.59 | 2.92 | 2.92 | 2.91 | 2.93 |
| | | Amps | 5.5 | 6.0 | 6.0 | 6.1 | 6.9 | 6.9 | 6.8 | 6.9 | 7.9 | 7.9 | 7.9 | 7.9 | 9.0 | 9.0 | **9.2** | 9.1 | 10.0 | 10.0 | 10.0 | 10.0 | 10.1 | 10.1 | 10.1 | 10.1 |
| | | Hi PR | 255 | 264 | 266 | 270 | 306 | 308 | 309 | 314 | 353 | 354 | 356 | 360 | 403 | 404 | **407** | 411 | 458 | 459 | 461 | 465 | 517 | 518 | 520 | 524 |
| | | Lo PR | 119 | 122 | 129 | 140 | 123 | 128 | 135 | 147 | 128 | 133 | 140 | 152 | 132 | 136 | **146** | 156 | 136 | 140 | 148 | 160 | 140 | 145 | 153 | 165 |
| | 920 | MBh | 26.2 | 26.6 | 27.4 | 28.5 | 25.4 | 25.7 | 26.5 | 27.6 | 24.1 | 24.4 | 25.2 | 26.3 | 22.4 | 22.8 | 23.5 | 24.5 | 20.6 | 20.9 | 21.6 | 22.6 | 18.9 | 19.2 | 19.9 | 20.9 |
| | | S/T | 0.95 | 0.87 | 0.74 | 0.60 | 1.01 | 0.87 | 0.74 | 0.60 | 1.01 | 0.89 | 0.76 | 0.62 | 1.00 | 0.91 | 0.78 | 0.64 | 1.00 | 0.93 | 0.80 | 0.66 | 0.99 | 0.99 | 0.84 | 0.70 |
| | | ΔT | 26 | 24 | 21 | 17 | 25 | 24 | 20 | 17 | 25 | 23 | 20 | 17 | 24 | 22 | 19 | 16 | 23 | 22 | 18 | 15 | 24 | 22 | 19 | 16 |
| | | kW | 1.59 | 1.59 | 1.59 | 1.60 | 1.80 | 1.80 | 1.80 | 1.81 | 2.04 | 2.04 | 2.04 | 2.05 | 2.30 | 2.30 | 2.29 | 2.31 | 2.59 | 2.59 | 2.58 | 2.60 | 2.93 | 2.93 | 2.92 | 2.94 |
| | | Amps | 6.1 | 6.1 | 6.1 | 6.1 | 6.9 | 6.9 | 6.9 | 7.0 | 7.9 | 7.9 | 7.9 | 8.0 | 9.1 | 9.0 | 9.0 | 9.1 | 10.0 | 10.0 | 10.0 | 10.1 | 10.1 | 10.1 | 10.1 | 10.1 |
| | | Hi PR | 266 | 267 | 269 | 273 | 309 | 310 | 312 | 317 | 355 | 356 | 358 | 363 | 405 | 407 | 408 | 413 | 460 | 461 | 463 | 468 | 519 | 520 | 522 | 527 |
| | | Lo PR | 120 | 124 | 131 | 143 | 126 | 130 | 138 | 149 | 130 | 135 | 143 | 154 | 134 | 139 | 146 | 158 | 138 | 142 | 150 | 162 | 142 | 147 | 155 | 167 |
| 85 | 680 | MBh | 23.4 | 26.1 | 26.9 | 28.1 | 24.9 | 25.3 | 26.0 | 27.1 | 23.7 | 24.0 | 24.7 | 25.8 | 22.0 | 22.3 | 23.0 | 24.1 | 20.2 | 20.5 | 21.2 | 22.2 | 18.5 | 18.8 | 19.5 | 20.5 |
| | | S/T | 1.01 | 0.86 | 0.73 | 0.58 | 1.01 | 0.86 | 0.73 | 0.59 | 1.01 | 0.88 | 0.75 | 0.61 | 1.00 | 1.00 | 0.77 | 0.63 | 1.00 | 1.00 | 0.78 | 0.65 | 0.99 | 0.99 | 0.83 | 0.69 |
| | | ΔT | 35 | 31 | 27 | 23 | 31 | 30 | 26 | 23 | 31 | 29 | 26 | 22 | 30 | 28 | 25 | 22 | 29 | 27 | 24 | 21 | 29 | 27 | 24 | 21 |
| | | kW | 1.27 | 1.57 | 1.57 | 1.58 | 1.78 | 1.78 | 1.78 | 1.79 | 2.02 | 2.02 | 2.02 | 2.03 | 2.28 | 2.28 | 2.27 | 2.29 | 2.57 | 2.57 | 2.56 | 2.58 | 2.91 | 2.91 | 2.90 | 2.92 |
| | | Amps | 5.0 | 6.0 | 6.0 | 6.0 | 6.8 | 6.8 | 6.8 | 6.9 | 7.8 | 7.8 | 7.8 | 7.9 | 9.0 | 9.0 | 8.9 | 9.0 | 10.0 | 10.0 | 10.0 | 10.0 | 10.1 | 10.1 | 10.2 | 10.1 |
| | | Hi PR | 250 | 263 | 265 | 269 | 305 | 306 | 308 | 313 | 351 | 352 | 354 | 359 | 401 | 402 | 404 | 409 | 456 | 457 | 459 | 464 | 515 | 516 | 518 | 523 |
| | | Lo PR | 120 | 121 | 129 | 140 | 123 | 127 | 135 | 146 | 128 | 132 | 140 | 152 | 132 | 136 | 144 | 156 | 135 | 140 | 148 | 159 | 140 | 144 | 152 | 164 |
| | 800 | MBh | 26.2 | 26.5 | 27.3 | 28.4 | 25.3 | 25.7 | 26.4 | 27.5 | 24.0 | 24.4 | 25.1 | 26.2 | 22.4 | 22.7 | 23.4 | 24.5 | 20.5 | 20.8 | 21.5 | 22.6 | 18.8 | 19.2 | 19.8 | 20.8 |
| | | S/T | 1.01 | 0.93 | 0.80 | 0.66 | 1.01 | 0.94 | 0.80 | 0.66 | 1.01 | 0.96 | 0.82 | 0.68 | 1.00 | 1.00 | 0.84 | 0.70 | 1.00 | 1.00 | 0.86 | 0.72 | 0.99 | 0.99 | 0.90 | 0.77 |
| | | ΔT | 31 | 29 | 26 | 22 | 30 | 28 | 25 | 21 | 30 | 28 | 25 | 21 | 29 | 27 | 24 | 20 | 27 | 26 | 23 | 19 | 28 | 26 | 23 | 20 |
| | | kW | 1.59 | 1.58 | 1.58 | 1.60 | 1.80 | 1.80 | 1.79 | 1.81 | 2.03 | 2.03 | 2.03 | 2.05 | 2.29 | 2.29 | 2.29 | 2.30 | 2.58 | 2.58 | 2.58 | 2.59 | 2.92 | 2.92 | 2.92 | 2.93 |
| | | Amps | 6.1 | 6.1 | 6.0 | 6.1 | 6.9 | 6.9 | 6.9 | 6.9 | 7.9 | 7.9 | 7.9 | 7.9 | 9.0 | 9.0 | 9.0 | 9.1 | 10.0 | 10.0 | 10.0 | 10.0 | 10.1 | 10.1 | 10.1 | 10.1 |
| | | Hi PR | 264 | 265 | 267 | 272 | 308 | 309 | 311 | 315 | 354 | 355 | 357 | 361 | 404 | 405 | 407 | 412 | 459 | 460 | 462 | 467 | 518 | 519 | 521 | 526 |
| | | Lo PR | 119 | 124 | 131 | 142 | 125 | 129 | 137 | 149 | 130 | 134 | 142 | 154 | 134 | 138 | 146 | 158 | 137 | 142 | 150 | 162 | 142 | 146 | 154 | 167 |
| | 920 | MBh | 26.7 | 27.0 | 27.8 | 28.9 | 25.8 | 26.1 | 26.9 | 28.0 | 24.5 | 24.8 | 25.6 | 26.7 | 22.8 | 23.2 | 23.9 | 24.9 | 21.0 | 21.3 | 22.0 | 23.0 | 19.3 | 19.6 | 20.3 | 21.3 |
| | | S/T | 1.01 | 0.97 | 0.84 | 0.70 | 1.01 | 0.97 | 0.84 | 0.70 | 1.01 | 1.01 | 0.86 | 0.72 | 1.00 | 1.00 | 0.88 | 0.74 | 1.00 | 1.00 | 0.89 | 0.76 | 0.99 | 0.99 | 0.94 | 0.80 |
| | | ΔT | 30 | 28 | 25 | 21 | 29 | 27 | 24 | 20 | 29 | 27 | 23 | 20 | 27 | 26 | 23 | 19 | 26 | 25 | 22 | 18 | 27 | 25 | 22 | 19 |
| | | kW | 1.60 | 1.59 | 1.59 | 1.61 | 1.81 | 1.81 | 1.80 | 1.82 | 2.05 | 2.04 | 2.04 | 2.06 | 2.30 | 2.30 | 2.30 | 2.31 | 2.59 | 2.59 | 2.59 | 2.60 | 2.93 | 2.93 | 2.93 | 2.94 |
| | | Amps | 6.1 | 6.1 | 6.1 | 6.1 | 6.9 | 6.9 | 6.9 | 7.0 | 7.9 | 7.9 | 7.9 | 8.0 | 9.1 | 9.1 | 9.0 | 9.1 | 10.0 | 10.0 | 10.0 | 10.1 | 10.1 | 10.1 | 10.1 | 10.1 |
| | | Hi PR | 267 | 268 | 270 | 274 | 310 | 311 | 313 | 318 | 356 | 358 | 359 | 364 | 407 | 408 | 410 | 414 | 461 | 463 | 464 | 469 | 520 | 522 | 524 | 528 |
| | | Lo PR | 122 | 126 | 133 | 145 | 127 | 132 | 139 | 151 | 132 | 137 | 144 | 156 | 136 | 140 | 148 | 160 | 139 | 144 | 152 | 164 | 144 | 149 | 157 | 169 |

IDB = Entering Indoor Dry Bulb Temperature

Shaded area is AHRI conditions

kW = Total system power

High and low pressures are measured at the liquid and suction service valves.

Amps = outdoor unit amps (comp.+fan)

Airflow may vary depending on actual ambient conditions and system operation modes.

# Expanded Cooling Data — DC6VSA301WA* / DFVE36CP1300A*

| | | | Outdoor Ambient Temperature | | | | | | | | | | | | | | | | | | | | | | | |
|---|---|---|---|---|---|---|---|---|---|---|---|---|---|---|---|---|---|---|---|---|---|---|---|---|---|---|
| | | | 65°F | | | | 75°F | | | | 85°F | | | | 95°F | | | | 105°F | | | | 115°F | | | |
| | | | Entering Indoor Wet Bulb Temperature | | | | | | | | | | | | | | | | | | | | | | | |
| IDB | Airflow | | 59 | 63 | 67 | 71 | 59 | 63 | 67 | 71 | 59 | 63 | 67 | 71 | 59 | 63 | 67 | 71 | 59 | 63 | 67 | 71 | 59 | 63 | 67 | 71 |
| 70 | 860 | MBh | 31.0 | 31.3 | 32.2 | | 29.8 | 30.3 | 31.2 | | 28.3 | 28.7 | 29.6 | | 26.3 | 26.7 | 27.5 | | 24.0 | 24.4 | 25.3 | | 22.0 | 22.4 | 23.2 | |
| | | S/T | 0.60 | 0.52 | 0.38 | | 0.60 | 0.52 | 0.39 | | 0.63 | 0.55 | 0.41 | | 0.65 | 0.57 | 0.44 | | 0.68 | 0.60 | 0.46 | | 0.73 | 0.66 | 0.52 | |
| | | ΔT | 22 | 18 | 15 | | 20 | 18 | 14 | | 19 | 18 | 14 | | 19 | 17 | 14 | | 18 | 16 | 13 | | 18 | 17 | 14 | |
| | | kW | 1.82 | 2.03 | 2.02 | | 2.27 | 2.27 | 2.27 | | 2.54 | 2.54 | 2.54 | | 2.83 | 2.83 | 2.83 | | 3.15 | 3.15 | 3.15 | | 3.53 | 3.52 | 3.52 | |
| | | Amps | 6.7 | 7.6 | 7.5 | | 8.6 | 8.6 | 8.6 | | 9.8 | 9.8 | 9.8 | | 11.0 | 11.0 | 11.0 | | 12.4 | 12.4 | 12.4 | | 13.9 | 13.9 | 13.9 | |
| | | Hi PR | 274 | 275 | 277 | | 317 | 318 | 320 | | 362 | 364 | 365 | | 411 | 412 | 414 | | 464 | 465 | 467 | | 520 | 521 | 523 | |
| | | Lo PR | 119 | 120 | 126 | | 123 | 126 | 133 | | 127 | 131 | 138 | | 131 | 135 | 142 | | 135 | 138 | 145 | | 140 | 143 | 150 | |
| | 1010 | MBh | 31.5 | 31.8 | 32.7 | | 30.3 | 30.7 | 31.6 | | 28.8 | 29.2 | 30.1 | | 26.7 | 27.1 | 28.0 | | 24.5 | 24.9 | 25.7 | | 22.4 | 22.8 | 23.6 | |
| | | S/T | 0.68 | 0.59 | 0.46 | | 0.68 | 0.60 | 0.46 | | 0.71 | 0.63 | 0.49 | | 0.73 | 0.65 | 0.51 | | 0.76 | 0.68 | 0.54 | | 0.81 | 0.73 | 0.59 | |
| | | ΔT | 21 | 17 | 13 | | 18 | 16 | 13 | | 18 | 16 | 13 | | 17 | 16 | 12 | | 17 | 15 | 12 | | 17 | 16 | 13 | |
| | | kW | 1.84 | 2.04 | 2.04 | | 2.29 | 2.29 | 2.28 | | 2.56 | 2.56 | 2.55 | | 2.85 | 2.85 | 2.84 | | 3.17 | 3.17 | 3.16 | | 3.54 | 3.54 | 3.54 | |
| | | Amps | 6.8 | 7.6 | 7.6 | | 8.7 | 8.7 | 8.7 | | 9.9 | 9.9 | 9.8 | | 11.1 | 11.1 | 11.1 | | 12.5 | 12.4 | 12.4 | | 14.0 | 14.0 | 14.0 | |
| | | Hi PR | 277 | 278 | 280 | | 320 | 321 | 323 | | 365 | 366 | 368 | | 414 | 415 | 417 | | 467 | 468 | 470 | | 523 | 524 | 526 | |
| | | Lo PR | 121 | 122 | 129 | | 125 | 128 | 135 | | 129 | 133 | 140 | | 133 | 137 | 144 | | 137 | 140 | 147 | | 142 | 145 | 152 | |
| | 1160 | MBh | 32.0 | 32.4 | 33.3 | | 30.9 | 31.3 | 32.2 | | 29.3 | 29.7 | 30.6 | | 27.3 | 27.7 | 28.5 | | 25.0 | 25.4 | 26.2 | | 23.0 | 23.3 | 24.2 | |
| | | S/T | 0.71 | 0.63 | 0.49 | | 0.72 | 0.64 | 0.50 | | 0.74 | 0.67 | 0.53 | | 0.77 | 0.69 | 0.55 | | 0.79 | 0.72 | 0.58 | | 1.01 | 0.77 | 0.63 | |
| | | ΔT | 18 | 16 | 12 | | 17 | 15 | 12 | | 17 | 15 | 12 | | 16 | 15 | 11 | | 16 | 14 | 11 | | 16 | 15 | 12 | |
| | | kW | 2.06 | 2.06 | 2.05 | | 2.30 | 2.30 | 2.30 | | 2.57 | 2.57 | 2.57 | | 2.86 | 2.86 | 2.86 | | 3.18 | 3.18 | 3.18 | | 3.55 | 3.55 | 3.55 | |
| | | Amps | 7.7 | 7.7 | 7.7 | | 8.8 | 8.7 | 8.7 | | 9.9 | 9.9 | 9.9 | | 11.2 | 11.1 | 11.1 | | 12.5 | 12.5 | 12.5 | | 14.1 | 14.1 | 14.0 | |
| | | Hi PR | 279 | 280 | 282 | | 323 | 324 | 326 | | 368 | 369 | 371 | | 417 | 418 | 420 | | 469 | 471 | 472 | | 526 | 527 | 529 | |
| | | Lo PR | 121 | 124 | 131 | | 127 | 130 | 137 | | 132 | 135 | 142 | | 136 | 139 | 146 | | 139 | 143 | 150 | | 144 | 147 | 155 | |
| 75 | 860 | MBh | 31.0 | 31.3 | 32.3 | 33.7 | 29.9 | 30.3 | 31.2 | 32.6 | 28.3 | 28.7 | 29.6 | 31.0 | 26.3 | 26.7 | 27.6 | 28.9 | 24.1 | 24.5 | 25.3 | 26.6 | 22.0 | 22.4 | 23.2 | 24.5 |
| | | S/T | 0.73 | 0.64 | 0.51 | 0.37 | 0.73 | 0.65 | 0.52 | 0.37 | 0.76 | 0.68 | 0.55 | 0.40 | 0.78 | 0.71 | 0.57 | 0.42 | 1.01 | 0.73 | 0.59 | 0.45 | 1.01 | 0.79 | 0.65 | 0.50 |
| | | ΔT | 27 | 22 | 19 | 15 | 24 | 22 | 18 | 15 | 23 | 21 | 18 | 15 | 22 | 21 | 17 | 14 | 21 | 20 | 17 | 14 | 22 | 20 | 17 | 14 |
| | | kW | 1.82 | 2.03 | 2.02 | 2.04 | 2.27 | 2.27 | 2.27 | 2.29 | 2.54 | 2.54 | 2.54 | 2.56 | 2.83 | 2.83 | 2.83 | 2.84 | 3.15 | 3.15 | 3.14 | 3.16 | 3.52 | 3.52 | 3.52 | 3.54 |
| | | Amps | 6.7 | 7.5 | 7.5 | 7.6 | 8.6 | 8.6 | 8.6 | 8.7 | 9.8 | 9.8 | 9.8 | 9.8 | 11.0 | 11.0 | 11.0 | 11.1 | 12.4 | 12.4 | 12.4 | 12.4 | 13.9 | 13.9 | 13.9 | 14.0 |
| | | Hi PR | 274 | 275 | 277 | 282 | 317 | 318 | 320 | 325 | 363 | 364 | 366 | 370 | 411 | 413 | 415 | 419 | 464 | 465 | 467 | 472 | 520 | 521 | 523 | 528 |
| | | Lo PR | 119 | 120 | 127 | 138 | 123 | 126 | 133 | 144 | 127 | 131 | 138 | 149 | 131 | 135 | 142 | 153 | 135 | 138 | 145 | 157 | 140 | 143 | 150 | 162 |
| | 1010 | MBh | 31.5 | 31.8 | 32.7 | 34.2 | 30.3 | 30.8 | 31.7 | 33.0 | 28.8 | 29.2 | 30.1 | 31.4 | 26.7 | **27.1** | 28.0 | 29.3 | 24.5 | 24.9 | 25.7 | 27.0 | 22.5 | 22.8 | 23.6 | 24.9 |
| | | S/T | 0.81 | 0.72 | 0.58 | 0.44 | 0.81 | 0.73 | 0.59 | 0.45 | 0.84 | 0.76 | 0.62 | 0.48 | 1.00 | **0.78** | 0.64 | 0.50 | 1.01 | 0.81 | 0.67 | 0.52 | 1.01 | 0.87 | 0.73 | 0.58 |
| | | ΔT | 25 | 21 | 18 | 14 | 22 | 20 | 17 | 14 | 22 | 20 | 17 | 13 | 21 | **19** | 16 | 13 | 20 | 19 | 15 | 12 | 21 | 19 | 16 | 13 |
| | | kW | 1.84 | 2.04 | 2.04 | 2.06 | 2.29 | 2.29 | 2.28 | 2.30 | 2.56 | 2.56 | 2.55 | 2.57 | 2.85 | **2.85** | 2.84 | 2.86 | 3.17 | 3.17 | 3.16 | 3.18 | 3.54 | 3.54 | 3.53 | 3.55 |
| | | Amps | 6.8 | 7.6 | 7.6 | 7.7 | 8.7 | 8.7 | 8.7 | 8.7 | 9.9 | 9.8 | 9.8 | 9.9 | 11.1 | **11.1** | 11.1 | 11.1 | 12.4 | 12.4 | 12.4 | 12.5 | 14.0 | 14.0 | 14.0 | 14.1 |
| | | Hi PR | 277 | 278 | 280 | 285 | 320 | 321 | 323 | 328 | 365 | 367 | 368 | 373 | 414 | **415** | 417 | 422 | 467 | 468 | 470 | 475 | 523 | 524 | 526 | 531 |
| | | Lo PR | 121 | 122 | 129 | 140 | 125 | 128 | 135 | 146 | 130 | 133 | 140 | 151 | 133 | **137** | 144 | 155 | 137 | 140 | 147 | 159 | 142 | 145 | 152 | 164 |
| | 1160 | MBh | 32.0 | 32.4 | 33.3 | 34.8 | 30.9 | 31.3 | 32.2 | 33.6 | 29.4 | 29.8 | 30.6 | 32.0 | 27.3 | 27.7 | 28.6 | 29.9 | 25.0 | 25.4 | 26.3 | 27.5 | 23.0 | 23.4 | 24.2 | 25.4 |
| | | S/T | 0.83 | 0.76 | 0.62 | 0.48 | 0.85 | 0.77 | 0.63 | 0.49 | 0.87 | 0.80 | 0.66 | 0.52 | 1.00 | 0.82 | 0.68 | 0.54 | 1.01 | 0.85 | 0.71 | 0.56 | 1.01 | 0.90 | 0.77 | 0.62 |
| | | ΔT | 22 | 20 | 16 | 13 | 21 | 19 | 16 | 12 | 21 | 19 | 16 | 12 | 20 | 18 | 15 | 12 | 19 | 18 | 14 | 11 | 20 | 18 | 15 | 12 |
| | | kW | 2.06 | 2.06 | 2.05 | 2.07 | 2.30 | 2.30 | 2.30 | 2.32 | 2.57 | 2.57 | 2.57 | 2.59 | 2.86 | 2.86 | 2.85 | 2.87 | 3.18 | 3.18 | 3.17 | 3.19 | 3.55 | 3.55 | 3.55 | 3.57 |
| | | Amps | 7.7 | 7.7 | 7.7 | 7.7 | 8.7 | 8.7 | 8.7 | 8.8 | 9.9 | 9.9 | 9.9 | 10.0 | 11.1 | 11.1 | 11.1 | 11.2 | 12.5 | 12.5 | 12.5 | 12.6 | 14.1 | 14.0 | 14.0 | 14.1 |
| | | Hi PR | 279 | 281 | 283 | 287 | 323 | 324 | 326 | 331 | 368 | 369 | 371 | 376 | 417 | 418 | 420 | 425 | 470 | 471 | 473 | 477 | 526 | 527 | 529 | 534 |
| | | Lo PR | 121 | 124 | 131 | 142 | 127 | 130 | 137 | 149 | 132 | 135 | 142 | 154 | 136 | 139 | 146 | 158 | 139 | 143 | 150 | 162 | 144 | 147 | 155 | 167 |

IDB = Entering Indoor Dry Bulb Temperature

Shaded area is ACCA (TVA) conditions

kW = Total system power

High and low pressures are measured at the liquid and suction service valves.

Amps = outdoor unit amps (comp.+fan)

Airflow may vary depending on actual ambient conditions and system operation modes.

| | | | Outdoor Ambient Temperature | | | | | | | | | | | | | | | | | | | | | | | |
|---|---|---|---|---|---|---|---|---|---|---|---|---|---|---|---|---|---|---|---|---|---|---|---|---|---|---|
| | | | 65°F | | | | 75°F | | | | 85°F | | | | 95°F | | | | 105°F | | | | 115°F | | | |
| | | | Entering Indoor Wet Bulb Temperature | | | | | | | | | | | | | | | | | | | | | | | |
| IDB | Airflow | | 59 | 63 | 67 | 71 | 59 | 63 | 67 | 71 | 59 | 63 | 67 | 71 | 59 | 63 | 67 | 71 | 59 | 63 | 67 | 71 | 59 | 63 | 67 | 71 |
| 80 | 860 | MBh | 31.2 | 31.5 | 32.4 | 33.8 | 30.0 | 30.4 | 31.3 | 32.7 | 28.5 | 28.9 | 29.8 | 31.1 | 26.4 | 26.9 | 27.7 | 29.0 | 24.2 | 24.6 | 25.4 | 26.7 | 22.2 | 22.6 | 23.4 | 24.6 |
| | | S/T | 0.86 | 0.77 | 0.63 | 0.49 | 0.99 | 0.78 | 0.64 | 0.50 | 1.00 | 0.81 | 0.67 | 0.53 | 1.00 | 0.83 | 0.70 | 0.55 | 1.01 | 0.86 | 0.72 | 0.58 | 1.01 | 0.92 | 0.78 | 0.63 |
| | | ΔT | 31 | 26 | 23 | 19 | 27 | 26 | 22 | 19 | 27 | 25 | 22 | 19 | 26 | 24 | 21 | 18 | 25 | 23 | 20 | 17 | 25 | 24 | 21 | 18 |
| | | kW | 1.82 | 2.03 | 2.02 | 2.04 | 2.27 | 2.27 | 2.27 | 2.29 | 2.54 | 2.54 | 2.54 | 2.56 | 2.83 | 2.83 | 2.83 | 2.85 | 3.15 | 3.15 | 3.15 | 3.17 | 3.53 | 3.52 | 3.52 | 3.54 |
| | | Amps | 6.7 | 7.6 | 7.5 | 7.6 | 8.6 | 8.6 | 8.6 | 8.7 | 9.8 | 9.8 | 9.8 | 9.8 | 11.0 | 11.0 | 11.0 | 11.1 | 12.4 | 12.4 | 12.4 | 12.4 | 13.9 | 13.9 | 13.9 | 14.0 |
| | | Hi PR | 274 | 276 | 278 | 282 | 318 | 319 | 321 | 326 | 363 | 364 | 366 | 371 | 412 | 413 | 415 | 420 | 465 | 466 | 468 | 472 | 521 | 522 | 524 | 529 |
| | | Lo PR | 120 | 120 | 127 | 138 | 123 | 126 | 133 | 144 | 128 | 131 | 138 | 150 | 132 | 135 | 142 | 154 | 135 | 139 | 146 | 158 | 140 | 144 | 151 | 163 |
| | 1010 | MBh | 31.5 | 32.0 | 32.9 | 34.3 | 30.5 | 30.9 | 31.8 | 33.2 | 28.9 | 29.4 | 30.2 | 31.6 | 26.9 | 27.3 | **28.4** | 29.5 | 24.6 | 25.0 | 25.9 | 27.1 | 22.6 | 23.0 | 23.8 | 25.0 |
| | | S/T | 0.92 | 0.85 | 0.71 | 0.57 | 0.99 | 0.86 | 0.72 | 0.58 | 1.00 | 0.89 | 0.75 | 0.60 | 1.00 | 0.91 | **0.77** | 0.63 | 1.01 | 0.94 | 0.80 | 0.65 | 1.01 | 1.01 | 0.86 | 0.71 |
| | | ΔT | 27 | 25 | 22 | 18 | 26 | 24 | 21 | 18 | 26 | 24 | 21 | 17 | 25 | 23 | **20** | 17 | 24 | 22 | 19 | 16 | 24 | 23 | 20 | 17 |
| | | kW | 2.05 | 2.04 | 2.04 | 2.06 | 2.29 | 2.29 | 2.28 | 2.30 | 2.56 | 2.56 | 2.55 | 2.57 | 2.85 | 2.85 | **2.84** | 2.86 | 3.17 | 3.17 | 3.16 | 3.18 | 3.54 | 3.54 | 3.53 | 3.55 |
| | | Amps | 7.6 | 7.6 | 7.6 | 7.7 | 8.7 | 8.7 | 8.7 | 8.8 | 9.9 | 9.9 | 9.8 | 9.9 | 11.1 | 11.1 | **11.0** | 11.2 | 12.5 | 12.4 | 12.4 | 12.5 | 14.0 | 14.0 | 14.0 | 14.1 |
| | | Hi PR | 277 | 278 | 280 | 285 | 321 | 322 | 324 | 328 | 366 | 367 | 369 | 374 | 415 | 416 | **415** | 423 | 467 | 469 | 470 | 475 | 524 | 525 | 527 | 531 |
| | | Lo PR | 119 | 122 | 129 | 140 | 125 | 128 | 135 | 147 | 130 | 133 | 140 | 152 | 134 | 137 | **146** | 156 | 137 | 141 | 148 | 160 | 142 | 146 | 153 | 165 |
| | 1160 | MBh | 32.1 | 32.6 | 33.5 | 34.9 | 31.1 | 31.5 | 32.4 | 33.8 | 29.5 | 29.9 | 30.8 | 32.1 | 27.4 | 27.8 | 28.7 | 30.0 | 25.2 | 25.6 | 26.4 | 27.7 | 23.1 | 23.5 | 24.3 | 25.5 |
| | | S/T | 0.96 | 0.88 | 0.75 | 0.61 | 0.99 | 0.89 | 0.76 | 0.61 | 1.00 | 0.92 | 0.79 | 0.64 | 1.00 | 0.95 | 0.81 | 0.67 | 1.01 | 0.98 | 0.84 | 0.69 | 1.01 | 1.01 | 0.89 | 0.75 |
| | | ΔT | 26 | 24 | 20 | 17 | 25 | 23 | 20 | 16 | 25 | 23 | 20 | 16 | 24 | 22 | 19 | 16 | 23 | 21 | 18 | 15 | 23 | 22 | 19 | 16 |
| | | kW | 2.06 | 2.06 | 2.05 | 2.07 | 2.30 | 2.30 | 2.30 | 2.32 | 2.57 | 2.57 | 2.57 | 2.59 | 2.86 | 2.86 | 2.86 | 2.88 | 3.18 | 3.18 | 3.18 | 3.19 | 3.55 | 3.55 | 3.55 | 3.57 |
| | | Amps | 7.7 | 7.7 | 7.7 | 7.8 | 8.8 | 8.7 | 8.7 | 8.8 | 9.9 | 9.9 | 9.9 | 10.0 | 11.2 | 11.1 | 11.1 | 11.2 | 12.5 | 12.5 | 12.5 | 12.6 | 14.1 | 14.1 | 14.0 | 14.1 |
| | | Hi PR | 280 | 281 | 283 | 288 | 323 | 324 | 326 | 331 | 369 | 370 | 372 | 376 | 417 | 419 | 421 | 425 | 470 | 471 | 473 | 478 | 526 | 527 | 529 | 534 |
| | | Lo PR | 122 | 125 | 132 | 143 | 127 | 131 | 138 | 149 | 132 | 136 | 143 | 154 | 136 | 139 | 147 | 158 | 140 | 143 | 150 | 162 | 144 | 148 | 155 | 167 |
| 85 | 860 | MBh | 31.7 | 32.0 | 32.9 | 34.4 | 30.5 | 31.0 | 31.9 | 33.2 | 29.0 | 29.4 | 30.3 | 31.6 | 26.9 | 27.3 | 28.2 | 29.5 | 24.7 | 25.1 | 25.9 | 27.2 | 22.6 | 23.0 | 23.8 | 25.1 |
| | | S/T | 0.99 | 0.87 | 0.74 | 0.59 | 0.99 | 0.88 | 0.75 | 0.60 | 1.00 | 0.91 | 0.78 | 0.63 | 1.00 | 1.00 | 0.80 | 0.65 | 1.01 | 1.01 | 0.82 | 0.68 | 1.01 | 1.01 | 0.88 | 0.73 |
| | | ΔT | 35 | 30 | 27 | 23 | 31 | 29 | 26 | 22 | 30 | 29 | 25 | 22 | 29 | 28 | 25 | 21 | 28 | 27 | 24 | 20 | 29 | 27 | 24 | 21 |
| | | kW | 1.83 | 2.03 | 2.03 | 2.05 | 2.28 | 2.28 | 2.27 | 2.29 | 2.55 | 2.55 | 2.54 | 2.56 | 2.84 | 2.84 | 2.83 | 2.85 | 3.16 | 3.16 | 3.15 | 3.17 | 3.53 | 3.53 | 3.52 | 3.54 |
| | | Amps | 6.8 | 7.6 | 7.6 | 7.6 | 8.6 | 8.6 | 8.6 | 8.7 | 9.8 | 9.8 | 9.8 | 9.9 | 11.1 | 11.0 | 11.0 | 11.1 | 12.4 | 12.4 | 12.4 | 12.5 | 14.0 | 14.0 | 13.9 | 14.0 |
| | | Hi PR | 276 | 277 | 279 | 284 | 319 | 320 | 322 | 327 | 364 | 366 | 367 | 372 | 413 | 414 | 416 | 421 | 466 | 467 | 469 | 474 | 522 | 523 | 525 | 530 |
| | | Lo PR | 122 | 122 | 129 | 140 | 125 | 128 | 135 | 146 | 130 | 133 | 140 | 151 | 134 | 137 | 144 | 156 | 137 | 141 | 148 | 159 | 142 | 145 | 153 | 164 |
| | 1010 | MBh | 32.1 | 32.5 | 33.4 | 34.8 | 31.0 | 31.4 | 32.3 | 33.7 | 29.4 | 29.8 | 30.7 | 32.1 | 27.4 | 27.8 | 28.6 | 29.9 | 25.1 | 25.5 | 26.3 | 27.6 | 23.1 | 23.4 | 24.2 | 25.5 |
| | | S/T | 0.99 | 0.95 | 0.81 | 0.67 | 0.99 | 0.96 | 0.82 | 0.68 | 1.00 | 0.99 | 0.85 | 0.71 | 1.00 | 1.00 | 0.88 | 0.73 | 1.01 | 1.01 | 0.90 | 0.76 | 1.01 | 1.01 | 0.96 | 0.81 |
| | | ΔT | 30 | 29 | 25 | 22 | 30 | 28 | 25 | 21 | 29 | 27 | 24 | 21 | 28 | 26 | 23 | 20 | 27 | 25 | 22 | 19 | 27 | 26 | 23 | 20 |
| | | kW | 2.05 | 2.05 | 2.04 | 2.06 | 2.30 | 2.29 | 2.29 | 2.31 | 2.57 | 2.56 | 2.56 | 2.58 | 2.85 | 2.85 | 2.85 | 2.87 | 3.17 | 3.17 | 3.17 | 3.19 | 3.55 | 3.54 | 3.54 | 3.56 |
| | | Amps | 7.7 | 7.6 | 7.6 | 7.7 | 8.7 | 8.7 | 8.7 | 8.8 | 9.9 | 9.9 | 9.9 | 9.9 | 11.1 | 11.1 | 11.1 | 11.2 | 12.5 | 12.5 | 12.4 | 12.5 | 14.0 | 14.0 | 14.0 | 14.1 |
| | | Hi PR | 279 | 280 | 282 | 286 | 322 | 323 | 325 | 330 | 367 | 368 | 370 | 375 | 416 | 417 | 419 | 424 | 469 | 470 | 472 | 477 | 525 | 526 | 528 | 533 |
| | | Lo PR | 121 | 124 | 131 | 142 | 127 | 130 | 137 | 149 | 132 | 135 | 142 | 154 | 136 | 139 | 146 | 158 | 139 | 143 | 150 | 162 | 144 | 147 | 155 | 167 |
| | 1160 | MBh | 32.7 | 33.1 | 34.0 | 35.4 | 31.6 | 32.0 | 32.9 | 34.3 | 30.0 | 30.4 | 31.3 | 32.6 | 27.9 | 28.3 | 29.2 | 30.5 | 25.6 | 26.0 | 26.9 | 28.1 | 23.6 | 24.0 | 24.8 | 26.0 |
| | | S/T | 0.99 | 0.99 | 0.85 | 0.71 | 0.99 | 0.99 | 0.86 | 0.72 | 1.00 | 1.00 | 0.89 | 0.75 | 1.00 | 1.00 | 0.91 | 0.77 | 1.01 | 1.01 | 0.94 | 0.79 | 1.01 | 1.01 | 1.00 | 0.85 |
| | | ΔT | 29 | 28 | 24 | 21 | 29 | 27 | 23 | 20 | 28 | 26 | 23 | 20 | 27 | 25 | 22 | 19 | 26 | 24 | 21 | 18 | 26 | 25 | 22 | 19 |
| | | kW | 2.06 | 2.06 | 2.06 | 2.08 | 2.31 | 2.31 | 2.30 | 2.32 | 2.58 | 2.58 | 2.57 | 2.59 | 2.87 | 2.87 | 2.86 | 2.88 | 3.19 | 3.18 | 3.18 | 3.20 | 3.56 | 3.56 | 3.55 | 3.57 |
| | | Amps | 7.7 | 7.7 | 7.7 | 7.8 | 8.8 | 8.8 | 8.7 | 8.8 | 9.9 | 9.9 | 9.9 | 10.0 | 11.2 | 11.2 | 11.1 | 11.2 | 12.5 | 12.5 | 12.5 | 12.6 | 14.1 | 14.1 | 14.1 | 14.1 |
| | | Hi PR | 281 | 282 | 284 | 289 | 325 | 326 | 328 | 332 | 370 | 371 | 373 | 378 | 419 | 420 | 422 | 427 | 471 | 473 | 475 | 479 | 528 | 529 | 531 | 535 |
| | | Lo PR | 123 | 127 | 133 | 145 | 129 | 132 | 139 | 151 | 134 | 137 | 144 | 156 | 138 | 141 | 148 | 160 | 141 | 145 | 152 | 164 | 146 | 150 | 157 | 169 |

IDB = Entering Indoor Dry Bulb Temperature

Shaded area is AHRI conditions

kW = Total system power

High and low pressures are measured at the liquid and suction service valves.

Amps = outdoor unit amps (comp.+fan)

Airflow may vary depending on actual ambient conditions and system operation modes.

# Expanded Cooling Data — DC6VSA361WA* / CAPEA3626*3A* + MBVK16CP1***A*

| | | | Outdoor Ambient Temperature | | | | | | | | | | | | | | | | | | | | | | | |
|---|---|---|---|---|---|---|---|---|---|---|---|---|---|---|---|---|---|---|---|---|---|---|---|---|---|---|
| | | | 65°F | | | | 75°F | | | | 85°F | | | | 95°F | | | | 105°F | | | | 115°F | | | |
| | | | Entering Indoor Wet Bulb Temperature | | | | | | | | | | | | | | | | | | | | | | | |
| IDB | Airflow | | 59 | 63 | 67 | 71 | 59 | 63 | 67 | 71 | 59 | 63 | 67 | 71 | 59 | 63 | 67 | 71 | 59 | 63 | 67 | 71 | 59 | 63 | 67 | 71 |
| 70 | 1070 | MBh | 29.0 | 32.6 | 37.0 | | 34.4 | 34.9 | 36.0 | | 32.8 | 33.3 | 34.3 | | 30.6 | 31.1 | 32.0 | | 28.1 | 28.6 | 29.5 | | 26.7 | 27.1 | 28.1 | |
| | | S/T | 0.66 | 0.55 | 0.39 | | 0.62 | 0.54 | 0.40 | | 0.64 | 0.57 | 0.43 | | 0.66 | 0.58 | 0.44 | | 0.68 | 0.61 | 0.47 | | 1.00 | 0.66 | 0.52 | |
| | | ΔT | 20 | 19 | 14 | | 19 | 17 | 14 | | 19 | 17 | 14 | | 18 | 16 | 13 | | 17 | 16 | 13 | | 18 | 16 | 13 | |
| | | kW | 1.56 | 1.77 | 2.31 | | 2.64 | 2.64 | 2.63 | | 3.00 | 2.99 | 2.99 | | 3.38 | 3.38 | 3.38 | | 3.82 | 3.82 | 3.81 | | 4.38 | 4.38 | 4.37 | |
| | | Amps | 5.7 | 6.5 | 8.6 | | 10.0 | 10.0 | 9.9 | | 11.5 | 11.5 | 11.4 | | 13.1 | 13.1 | 13.1 | | 14.9 | 14.9 | 14.9 | | 17.2 | 17.2 | 17.1 | |
| | | Hi PR | 283 | 288 | 292 | | 330 | 331 | 333 | | 372 | 373 | 375 | | 416 | 417 | 419 | | 462 | 463 | 465 | | 510 | 512 | 513 | |
| | | Lo PR | 120 | 120 | 124 | | 124 | 126 | 132 | | 131 | 133 | 139 | | 137 | 139 | 146 | | 143 | 145 | 152 | | 150 | 152 | 159 | |
| | 1260 | MBh | 32.7 | 36.5 | 37.6 | | 35.0 | 35.5 | 36.5 | | 33.3 | 33.8 | 34.8 | | 31.1 | 31.6 | 32.6 | | 28.6 | 29.1 | 30.0 | | 27.2 | 27.6 | 28.6 | |
| | | S/T | 0.72 | 0.61 | 0.47 | | 0.70 | 0.62 | 0.48 | | 0.72 | 0.64 | 0.50 | | 0.74 | 0.66 | 0.52 | | 1.00 | 0.68 | 0.54 | | 1.00 | 0.74 | 0.60 | |
| | | ΔT | 19 | 16 | 13 | | 18 | 16 | 13 | | 17 | 16 | 13 | | 17 | 15 | 12 | | 16 | 15 | 12 | | 17 | 15 | 12 | |
| | | kW | 1.78 | 2.34 | 2.33 | | 2.66 | 2.66 | 2.65 | | 3.01 | 3.01 | 3.01 | | 3.40 | 3.40 | 3.40 | | 3.84 | 3.84 | 3.83 | | 4.40 | 4.40 | 4.39 | |
| | | Amps | 6.6 | 8.7 | 8.7 | | 10.1 | 10.0 | 10.0 | | 11.6 | 11.6 | 11.5 | | 13.2 | 13.2 | 13.2 | | 15.0 | 15.0 | 15.0 | | 17.2 | 17.2 | 17.2 | |
| | | Hi PR | 289 | 293 | 295 | | 333 | 334 | 336 | | 375 | 376 | 378 | | 419 | 420 | 422 | | 465 | 466 | 468 | | 513 | 514 | 516 | |
| | | Lo PR | 120 | 120 | 126 | | 126 | 128 | 134 | | 133 | 135 | 142 | | 139 | 141 | 148 | | 145 | 147 | 154 | | 152 | 155 | 162 | |
| | 1450 | MBh | 36.7 | 37.2 | 38.3 | | 35.6 | 36.1 | 37.2 | | 34.0 | 34.5 | 35.5 | | 31.7 | 32.2 | 33.2 | | 29.2 | 29.7 | 30.7 | | 27.8 | 28.3 | 29.3 | |
| | | S/T | 0.73 | 0.65 | 0.51 | | 0.74 | 0.66 | 0.52 | | 0.76 | 0.68 | 0.54 | | 0.78 | 0.70 | 0.56 | | 1.00 | 0.72 | 0.58 | | 1.00 | 0.77 | 0.63 | |
| | | ΔT | 17 | 15 | 12 | | 17 | 15 | 12 | | 16 | 15 | 12 | | 16 | 14 | 11 | | 15 | 14 | 11 | | 16 | 14 | 11 | |
| | | kW | 2.36 | 2.35 | 2.35 | | 2.67 | 2.67 | 2.67 | | 3.03 | 3.03 | 3.02 | | 3.42 | 3.42 | 3.41 | | 3.85 | 3.85 | 3.85 | | 4.42 | 4.41 | 4.41 | |
| | | Amps | 8.8 | 8.8 | 8.7 | | 10.1 | 10.1 | 10.1 | | 11.6 | 11.6 | 11.6 | | 13.3 | 13.2 | 13.2 | | 15.1 | 15.0 | 15.0 | | 17.3 | 17.3 | 17.3 | |
| | | Hi PR | 295 | 296 | 298 | | 336 | 337 | 339 | | 377 | 379 | 381 | | 421 | 423 | 425 | | 468 | 469 | 471 | | 516 | 517 | 519 | |
| | | Lo PR | 121 | 123 | 129 | | 128 | 130 | 137 | | 135 | 137 | 144 | | 141 | 143 | 150 | | 147 | 150 | 156 | | 155 | 157 | 164 | |
| 75 | 1070 | MBh | 29.1 | 32.6 | 37.1 | 38.7 | 34.4 | 34.9 | 36.0 | 37.6 | 32.8 | 33.3 | 34.3 | 35.9 | 30.6 | 31.1 | 32.1 | 33.6 | 28.1 | 28.6 | 29.6 | 31.0 | 26.7 | 27.1 | 28.1 | 29.6 |
| | | S/T | 0.80 | 0.69 | 0.53 | 0.38 | 0.75 | 0.68 | 0.53 | 0.39 | 0.78 | 0.70 | 0.56 | 0.41 | 1.00 | 0.72 | 0.58 | 0.43 | 1.00 | 0.74 | 0.60 | 0.45 | 1.00 | 0.79 | 0.65 | 0.50 |
| | | ΔT | 24 | 23 | 18 | 15 | 23 | 21 | 18 | 14 | 22 | 21 | 18 | 14 | 22 | 20 | 17 | 14 | 21 | 19 | 16 | 13 | 21 | 20 | 17 | 14 |
| | | kW | 1.56 | 1.77 | 2.31 | 2.33 | 2.64 | 2.63 | 2.63 | 2.65 | 2.99 | 2.99 | 2.99 | 3.01 | 3.38 | 3.38 | 3.37 | 3.40 | 3.82 | 3.81 | 3.81 | 3.83 | 4.38 | 4.38 | 4.37 | 4.39 |
| | | Amps | 5.7 | 6.5 | 8.6 | 8.7 | 10.0 | 10.0 | 9.9 | 10.0 | 11.5 | 11.5 | 11.4 | 11.5 | 13.1 | 13.1 | 13.1 | 13.2 | 14.9 | 14.9 | 14.9 | 15.0 | 17.2 | 17.1 | 17.1 | 17.2 |
| | | Hi PR | 283 | 288 | 293 | 298 | 330 | 331 | 333 | 338 | 372 | 373 | 375 | 380 | 416 | 417 | 419 | 424 | 462 | 464 | 465 | 470 | 511 | 512 | 514 | 518 |
| | | Lo PR | 120 | 120 | 124 | 135 | 124 | 126 | 132 | 144 | 131 | 133 | 139 | 151 | 137 | 139 | 146 | 158 | 143 | 145 | 152 | 164 | 150 | 153 | 159 | 172 |
| | 1260 | MBh | 32.7 | 36.6 | 37.6 | 39.2 | 35.0 | 35.5 | 36.5 | 38.1 | 33.3 | 33.8 | 34.8 | 36.4 | 31.1 | **31.6** | 32.6 | 34.1 | 28.6 | 29.1 | 30.1 | 31.5 | 27.2 | 27.7 | 28.6 | 30.1 |
| | | S/T | 0.85 | 0.75 | 0.61 | 0.46 | 0.83 | 0.75 | 0.61 | 0.46 | 0.86 | 0.78 | 0.64 | 0.49 | 1.00 | **0.80** | 0.66 | 0.51 | 1.00 | 0.82 | 0.68 | 0.53 | 1.00 | 1.00 | 0.73 | 0.58 |
| | | ΔT | 24 | 20 | 17 | 13 | 21 | 20 | 16 | 13 | 21 | 19 | 16 | 13 | 20 | **19** | 16 | 13 | 20 | 18 | 15 | 12 | 20 | 19 | 16 | 13 |
| | | kW | 1.78 | 2.34 | 2.33 | 2.35 | 2.66 | 2.65 | 2.65 | 2.67 | 3.01 | 3.01 | 3.01 | 3.03 | 3.40 | **3.40** | 3.39 | 3.42 | 3.84 | 3.83 | 3.83 | 3.85 | 4.40 | 4.40 | 4.39 | 4.41 |
| | | Amps | 6.6 | 8.7 | 8.7 | 8.8 | 10.0 | 10.0 | 10.0 | 10.1 | 11.6 | 11.5 | 11.5 | 11.6 | 13.2 | **13.2** | 13.2 | 13.2 | 15.0 | 15.0 | 14.9 | 15.0 | 17.2 | 17.2 | 17.2 | 17.3 |
| | | Hi PR | 289 | 293 | 295 | 301 | 333 | 334 | 336 | 341 | 375 | 376 | 378 | 383 | 419 | **420** | 422 | 427 | 465 | 466 | 468 | 473 | 513 | 515 | 516 | 521 |
| | | Lo PR | 120 | 120 | 126 | 137 | 126 | 128 | 134 | 146 | 133 | 135 | 142 | 153 | 139 | **141** | 148 | 160 | 145 | 147 | 154 | 166 | 152 | 155 | 162 | 174 |
| | 1450 | MBh | 36.7 | 37.2 | 38.3 | 39.9 | 35.7 | 36.1 | 37.2 | 38.8 | 34.0 | 34.5 | 35.5 | 37.1 | 31.8 | 32.2 | 33.2 | 34.7 | 29.3 | 29.7 | 30.7 | 32.2 | 27.8 | 28.3 | 29.3 | 30.8 |
| | | S/T | 0.87 | 0.79 | 0.65 | 0.50 | 0.87 | 0.79 | 0.65 | 0.50 | 1.00 | 0.82 | 0.68 | 0.53 | 1.00 | 0.84 | 0.70 | 0.55 | 1.00 | 0.86 | 0.72 | 0.57 | 1.00 | 1.00 | 0.77 | 0.62 |
| | | ΔT | 21 | 19 | 16 | 12 | 20 | 19 | 15 | 12 | 20 | 18 | 15 | 12 | 19 | 18 | 15 | 12 | 19 | 17 | 14 | 11 | 19 | 18 | 15 | 12 |
| | | kW | 2.35 | 2.35 | 2.35 | 2.37 | 2.67 | 2.67 | 2.66 | 2.69 | 3.03 | 3.03 | 3.02 | 3.04 | 3.42 | 3.41 | 3.41 | 3.43 | 3.85 | 3.85 | 3.84 | 3.87 | 4.41 | 4.41 | 4.41 | 4.43 |
| | | Amps | 8.8 | 8.7 | 8.7 | 8.8 | 10.1 | 10.1 | 10.1 | 10.2 | 11.6 | 11.6 | 11.6 | 11.7 | 13.2 | 13.2 | 13.2 | 13.3 | 15.0 | 15.0 | 15.0 | 15.1 | 17.3 | 17.3 | 17.3 | 17.4 |
| | | Hi PR | 295 | 296 | 298 | 303 | 336 | 337 | 339 | 344 | 378 | 379 | 381 | 386 | 422 | 423 | 425 | 430 | 468 | 469 | 471 | 476 | 516 | 517 | 519 | 524 |
| | | Lo PR | 121 | 123 | 129 | 140 | 128 | 130 | 137 | 148 | 135 | 137 | 144 | 156 | 141 | 144 | 150 | 162 | 147 | 150 | 156 | 169 | 155 | 157 | 164 | 177 |

IDB = Entering Indoor Dry Bulb Temperature

Shaded area is ACCA (TVA) conditions

kW = Total system power

High and low pressures are measured at the liquid and suction service valves.

Amps = outdoor unit amps (comp.+fan)

Airflow may vary depending on actual ambient conditions and system operation modes.

## Expanded Cooling Data — DC6VSA361WA* / CAPEA3626*3A* + MBVK16CP1***A* (cont.)

| | | | Outdoor Ambient Temperature | | | | | | | | | | | | | | | | | | | | | | | |
|---|---|---|---|---|---|---|---|---|---|---|---|---|---|---|---|---|---|---|---|---|---|---|---|---|---|---|
| | | | 65°F | | | | 75°F | | | | 85°F | | | | 95°F | | | | 105°F | | | | 115°F | | | |
| | | | Entering Indoor Wet Bulb Temperature | | | | | | | | | | | | | | | | | | | | | | | |
| IDB | Airflow | | 59 | 63 | 67 | 71 | 59 | 63 | 67 | 71 | 59 | 63 | 67 | 71 | 59 | 63 | 67 | 71 | 59 | 63 | 67 | 71 | 59 | 63 | 67 | 71 |
| 80 | 1070 | MBh | 30.6 | 32.8 | 37.3 | 38.9 | 34.6 | 35.1 | 36.2 | 37.7 | 33.0 | 33.5 | 34.5 | 36.0 | 30.8 | 31.2 | 32.2 | 33.8 | 28.3 | 28.8 | 29.7 | 31.2 | 26.9 | 27.3 | 28.3 | 29.8 |
| | | S/T | 0.92 | 0.83 | 0.66 | 0.51 | 1.01 | 0.81 | 0.66 | 0.52 | 1.00 | 0.83 | 0.69 | 0.54 | 1.00 | 0.85 | 0.71 | 0.56 | 1.00 | 1.00 | 0.73 | 0.58 | 1.00 | 1.00 | 0.78 | 0.63 |
| | | ΔT | 29 | 27 | 22 | 19 | 26 | 25 | 22 | 18 | 26 | 24 | 21 | 18 | 25 | 24 | 21 | 17 | 25 | 23 | 20 | 17 | 25 | 23 | 20 | 17 |
| | | kW | 1.65 | 1.77 | 2.31 | 2.34 | 2.64 | 2.64 | 2.63 | 2.65 | 2.99 | 2.99 | 2.99 | 3.01 | 3.38 | 3.38 | 3.38 | 3.40 | 3.82 | 3.82 | 3.81 | 3.83 | 4.38 | 4.38 | 4.37 | 4.40 |
| | | Amps | 6.1 | 6.5 | 8.6 | 8.7 | 10.0 | 10.0 | 9.9 | 10.0 | 11.5 | 11.5 | 11.4 | 11.5 | 13.1 | 13.1 | 13.1 | 13.2 | 14.9 | 14.9 | 14.9 | 15.0 | 17.2 | 17.2 | 17.1 | 17.2 |
| | | Hi PR | 285 | 288 | 293 | 298 | 331 | 332 | 334 | 339 | 373 | 374 | 376 | 381 | 417 | 418 | 420 | 425 | 463 | 464 | 466 | 471 | 511 | 512 | 514 | 519 |
| | | Lo PR | 120 | 120 | 125 | 136 | 125 | 127 | 133 | 144 | 131 | 134 | 140 | 152 | 137 | 140 | 146 | 158 | 143 | 146 | 152 | 165 | 151 | 153 | 160 | 173 |
| | 1260 | MBh | 32.9 | 36.7 | 37.8 | 39.4 | 35.2 | 35.7 | 36.7 | 38.3 | 33.5 | 34.0 | 35.0 | 36.6 | 31.3 | 31.8 | **33.0** | 34.3 | 28.8 | 29.3 | 30.2 | 31.7 | 27.4 | 27.8 | 28.8 | 30.3 |
| | | S/T | 0.99 | 0.88 | 0.74 | 0.59 | 1.01 | 0.88 | 0.74 | 0.59 | 1.00 | 0.91 | 0.77 | 0.62 | 1.00 | 0.93 | **0.79** | 0.64 | 1.00 | 1.00 | 0.81 | 0.66 | 1.00 | 1.00 | 0.86 | 0.71 |
| | | ΔT | 28 | 24 | 21 | 17 | 25 | 23 | 20 | 17 | 25 | 23 | 20 | 17 | 24 | 22 | **19** | 16 | 23 | 22 | 19 | 16 | 24 | 22 | 19 | 16 |
| | | kW | 1.78 | 2.34 | 2.33 | 2.36 | 2.66 | 2.66 | 2.65 | 2.67 | 3.01 | 3.01 | 3.01 | 3.03 | 3.40 | 3.40 | **3.37** | 3.42 | 3.84 | 3.84 | 3.83 | 3.85 | 4.40 | 4.40 | 4.39 | 4.42 |
| | | Amps | 6.6 | 8.7 | 8.7 | 8.8 | 10.1 | 10.0 | 10.0 | 10.1 | 11.6 | 11.6 | 11.5 | 11.6 | 13.2 | 13.2 | **13.0** | 13.3 | 15.0 | 15.0 | 15.0 | 15.1 | 17.2 | 17.2 | 17.2 | 17.3 |
| | | Hi PR | 290 | 294 | 296 | 301 | 334 | 335 | 337 | 342 | 375 | 377 | 379 | 384 | 419 | 421 | **423** | 427 | 466 | 467 | 469 | 474 | 514 | 515 | 517 | 522 |
| | | Lo PR | 120 | 121 | 127 | 138 | 127 | 129 | 135 | 146 | 134 | 136 | 142 | 154 | 140 | 142 | **150** | 160 | 146 | 148 | 155 | 167 | 153 | 155 | 162 | 175 |
| | 1450 | MBh | 36.9 | 37.4 | 38.5 | 40.1 | 35.8 | 36.3 | 37.4 | 39.0 | 34.2 | 34.7 | 35.7 | 37.2 | 31.9 | 32.4 | 33.4 | 34.9 | 29.4 | 29.9 | 30.9 | 32.3 | 28.0 | 28.5 | 29.4 | 30.9 |
| | | S/T | 1.00 | 0.92 | 0.78 | 0.63 | 1.01 | 0.92 | 0.78 | 0.63 | 1.00 | 0.95 | 0.81 | 0.66 | 1.00 | 0.97 | 0.83 | 0.68 | 1.00 | 1.00 | 0.85 | 0.70 | 1.00 | 1.00 | 0.90 | 0.75 |
| | | ΔT | 25 | 23 | 20 | 16 | 24 | 22 | 19 | 16 | 24 | 22 | 19 | 16 | 23 | 21 | 18 | 15 | 22 | 21 | 18 | 15 | 23 | 21 | 18 | 15 |
| | | kW | 2.36 | 2.35 | 2.35 | 2.37 | 2.67 | 2.67 | 2.67 | 2.69 | 3.03 | 3.03 | 3.02 | 3.05 | 3.42 | 3.42 | 3.41 | 3.43 | 3.85 | 3.85 | 3.85 | 3.87 | 4.42 | 4.41 | 4.41 | 4.43 |
| | | Amps | 8.8 | 8.8 | 8.7 | 8.8 | 10.1 | 10.1 | 10.1 | 10.2 | 11.6 | 11.6 | 11.6 | 11.7 | 13.3 | 13.2 | 13.2 | 13.3 | 15.1 | 15.0 | 15.0 | 15.1 | 17.3 | 17.3 | 17.3 | 17.4 |
| | | | 296 | 297 | 299 | 304 | 337 | 338 | 340 | 345 | 378 | 379 | 381 | 386 | 422 | 423 | 425 | 430 | 468 | 470 | 472 | 476 | 517 | 518 | 520 | 524 |
| | | Lo PR | 121 | 123 | 129 | 140 | 129 | 131 | 137 | 149 | 136 | 138 | 145 | 156 | 142 | 144 | 151 | 163 | 148 | 150 | 157 | 169 | 155 | 158 | 165 | 177 |
| 85 | 1070 | MBh | 32.9 | 36.8 | 37.8 | 39.5 | 35.2 | 35.7 | 36.7 | 38.3 | 33.6 | 34.0 | 35.1 | 36.6 | 31.3 | 31.8 | 32.8 | 34.3 | 28.8 | 29.3 | 30.3 | 31.8 | 27.4 | 27.9 | 28.9 | 30.3 |
| | | S/T | 1.01 | 0.91 | 0.77 | 0.62 | 1.01 | 0.91 | 0.77 | 0.62 | 1.00 | 0.93 | 0.79 | 0.65 | 1.00 | 1.00 | 0.81 | 0.66 | 1.00 | 1.00 | 0.83 | 0.69 | 1.00 | 1.00 | 1.00 | 0.74 |
| | | ΔT | 33 | 29 | 26 | 22 | 30 | 28 | 25 | 22 | 29 | 28 | 25 | 21 | 29 | 27 | 24 | 21 | 28 | 26 | 23 | 20 | 28 | 26 | 24 | 20 |
| | | kW | 1.77 | 2.32 | 2.32 | 2.34 | 2.64 | 2.64 | 2.64 | 2.66 | 3.00 | 3.00 | 2.99 | 3.02 | 3.39 | 3.39 | 3.38 | 3.40 | 3.82 | 3.82 | 3.82 | 3.84 | 4.39 | 4.38 | 4.38 | 4.40 |
| | | Amps | 6.6 | 8.6 | 8.6 | 8.7 | 10.0 | 10.0 | 10.0 | 10.1 | 11.5 | 11.5 | 11.5 | 11.6 | 13.1 | 13.1 | 13.1 | 13.2 | 14.9 | 14.9 | 14.9 | 15.0 | 17.2 | 17.2 | 17.2 | 17.3 |
| | | Hi PR | 288 | 292 | 294 | 299 | 332 | 333 | 335 | 340 | 374 | 375 | 377 | 382 | 418 | 419 | 421 | 426 | 464 | 465 | 467 | 472 | 512 | 514 | 515 | 520 |
| | | Lo PR | 120 | 121 | 127 | 138 | 126 | 128 | 135 | 146 | 133 | 135 | 142 | 153 | 139 | 141 | 148 | 160 | 145 | 147 | 154 | 167 | 153 | 155 | 162 | 175 |
| | 1260 | MBh | 36.8 | 37.3 | 38.4 | 40.0 | 35.8 | 36.2 | 37.3 | 38.9 | 34.1 | 34.6 | 35.6 | 37.1 | 31.9 | 32.3 | 33.3 | 34.8 | 29.3 | 29.8 | 30.8 | 32.3 | 27.9 | 28.4 | 29.4 | 30.9 |
| | | S/T | 1.01 | 0.99 | 0.84 | 0.70 | 1.01 | 0.99 | 0.85 | 0.70 | 1.00 | 1.00 | 0.87 | 0.72 | 1.00 | 1.00 | 0.89 | 0.74 | 1.00 | 1.00 | 0.91 | 0.76 | 1.00 | 1.00 | 1.00 | 0.82 |
| | | ΔT | 29 | 27 | 24 | 21 | 29 | 27 | 24 | 20 | 28 | 27 | 23 | 20 | 27 | 26 | 23 | 19 | 26 | 25 | 22 | 19 | 27 | 25 | 22 | 19 |
| | | kW | 2.35 | 2.34 | 2.34 | 2.36 | 2.66 | 2.66 | 2.66 | 2.68 | 3.02 | 3.02 | 3.01 | 3.04 | 3.41 | 3.41 | 3.40 | 3.42 | 3.84 | 3.84 | 3.84 | 3.86 | 4.41 | 4.40 | 4.40 | 4.42 |
| | | Amps | 8.7 | 8.7 | 8.7 | 8.8 | 10.1 | 10.1 | 10.0 | 10.1 | 11.6 | 11.6 | 11.6 | 11.7 | 13.2 | 13.2 | 13.2 | 13.3 | 15.0 | 15.0 | 15.0 | 15.1 | 17.3 | 17.3 | 17.2 | 17.3 |
| | | Hi PR | 294 | 295 | 297 | 302 | 335 | 336 | 338 | 343 | 377 | 378 | 380 | 385 | 421 | 422 | 424 | 429 | 467 | 468 | 470 | 475 | 515 | 516 | 518 | 523 |
| | | Lo PR | 121 | 123 | 129 | 140 | 128 | 130 | 137 | 148 | 135 | 137 | 144 | 156 | 141 | 143 | 150 | 162 | 147 | 150 | 156 | 169 | 155 | 157 | 164 | 177 |
| | 1450 | MBh | 37.5 | 38.0 | 39.1 | 40.7 | 36.4 | 36.9 | 38.0 | 39.5 | 34.8 | 35.2 | 36.3 | 37.8 | 32.5 | 33.0 | 34.0 | 35.5 | 30.0 | 30.4 | 31.4 | 32.9 | 28.5 | 29.0 | 30.0 | 31.5 |
| | | S/T | 1.01 | 1.01 | 0.88 | 0.73 | 1.01 | 1.01 | 0.89 | 0.74 | 1.00 | 1.00 | 0.91 | 0.76 | 1.00 | 1.00 | 0.93 | 0.78 | 1.00 | 1.00 | 1.00 | 0.80 | 1.00 | 1.00 | 1.00 | 0.85 |
| | | ΔT | 28 | 26 | 23 | 20 | 28 | 26 | 23 | 19 | 27 | 25 | 22 | 19 | 26 | 25 | 22 | 18 | 26 | 24 | 21 | 18 | 26 | 24 | 21 | 18 |
| | | kW | 2.36 | 2.36 | 2.35 | 2.38 | 2.68 | 2.68 | 2.67 | 2.70 | 3.04 | 3.03 | 3.03 | 3.05 | 3.42 | 3.42 | 3.42 | 3.44 | 3.86 | 3.86 | 3.85 | 3.88 | 4.42 | 4.42 | 4.41 | 4.44 |
| | | Amps | 8.8 | 8.8 | 8.8 | 8.9 | 10.1 | 10.1 | 10.1 | 10.2 | 11.7 | 11.6 | 11.6 | 11.7 | 13.3 | 13.3 | 13.2 | 13.3 | 15.1 | 15.1 | 15.0 | 15.1 | 17.3 | 17.3 | 17.3 | 17.4 |
| | | Hi PR | 297 | 298 | 300 | 305 | 338 | 339 | 341 | 346 | 380 | 381 | 383 | 388 | 423 | 425 | 427 | 431 | 470 | 471 | 473 | 478 | 518 | 519 | 521 | 526 |
| | | Lo PR | 123 | 125 | 131 | 142 | 131 | 133 | 139 | 151 | 138 | 140 | 146 | 158 | 144 | 146 | 153 | 165 | 150 | 152 | 159 | 171 | 157 | 159 | 166 | 179 |

IDB = Entering Indoor Dry Bulb Temperature

Shaded area is AHRI conditions

kW = Total system power

High and low pressures are measured at the liquid and suction service valves.

Amps = outdoor unit amps (comp.+fan)

Airflow may vary depending on actual ambient conditions and system operation modes.

**DC6VSS1810A* / DFVE24BP1300A***
**Design Subcooling @ AHRI 95 °F Conditions, 9-11 °F**
**- 100 % Demand**

| Outdoor Temp. °F | Total BTU/h | Sensible BTU/h | Latent BTU/h | Total Watts |
|---|---|---|---|---|
| 75° | 19,000 | 13,500 | 5,500 | 1,080 |
| 80° | 18,600 | 13,400 | 5,200 | 1,165 |
| 85° | 18,100 | 13,200 | 4,900 | 1,250 |
| 90° | 17,600 | 13,000 | 4,600 | 1,340 |
| **95°** | **17,100** | **12,800** | **4,300** | **1,430** |
| 100° | 16,400 | 12,500 | 3,900 | 1,540 |
| 105° | 15,700 | 12,100 | 3,600 | 1,650 |
| 110° | 15,100 | 12,000 | 3,100 | 1,775 |
| 115° | 14,500 | 11,900 | 2,600 | 1,900 |
| **TVA Conditions @ 95° OD DB, 75° ID, 63° ID WB** | | | | |
| **95°** | **16,400** | **12,500** | **3,900** | **1,430** |

**DC6VSS1810A* / DFVE24BP1300A***
**Design Subcooling @ AHRI 95 °F Conditions, 9-11 °F**
**- Boost Mode**

| Outdoor Temp. °F | Total BTU/h | Sensible BTU/h | Latent BTU/h | Total Watts |
|---|---|---|---|---|
| 75° | 20,500 | 14,800 | 5,700 | 1,100 |
| 80° | 20,000 | 14,600 | 5,400 | 1,200 |
| 85° | 19,500 | 14,400 | 5,100 | 1,300 |
| 90° | 18,900 | 14,200 | 4,700 | 1,400 |
| **95°** | **18,300** | **13,900** | **4,400** | **1,450** |
| 100° | 17,600 | 13,600 | 4,000 | 1,600 |
| 105° | 16,900 | 13,200 | 3,700 | 1,700 |
| 110° | 16,300 | 13,100 | 3,200 | 1,800 |
| 115° | 15,700 | 13,000 | 2,700 | 1,950 |
| **TVA Conditions @ 95° OD DB, 75° ID, 63° ID WB** | | | | |
| **95°** | **17,600** | **13,600** | **4,000** | **1,450** |

**DC6VSS2410A* / DFVE24BP1300A***
**Design Subcooling @ AHRI 95 °F Conditions, 11-13 °F**
**- 100 % Demand**

| Outdoor Temp. °F | Total BTU/h | Sensible BTU/h | Latent BTU/h | Total Watts |
|---|---|---|---|---|
| 75° | 26,000 | 18,200 | 7,800 | 1,790 |
| 80° | 25,400 | 18,000 | 7,400 | 1,910 |
| 85° | 24,700 | 17,800 | 6,900 | 2,030 |
| 90° | 24,000 | 17,500 | 6,500 | 2,150 |
| **95°** | **23,200** | **17,200** | **6,000** | **2,270** |
| 100° | 22,200 | 16,600 | 5,600 | 2,420 |
| 105° | 21,100 | 16,000 | 5,100 | 2,570 |
| 110° | 20,300 | 15,900 | 4,400 | 2,740 |
| 115° | 19,400 | 15,700 | 3,700 | 2,910 |
| **TVA Conditions @ 95° OD DB, 75° ID, 63° ID WB** | | | | |
| **95°** | **22,200** | **16,700** | **5,500** | **2,290** |

**DC6VSS2410A* / DFVE24BP1300A***
**Design Subcooling @ AHRI 95 °F Conditions, 11-13 °F**
**- Boost Mode**

| Outdoor Temp. °F | Total BTU/h | Sensible BTU/h | Latent BTU/h | Total Watts |
|---|---|---|---|---|
| 75° | 28,300 | 20,100 | 8,200 | 1,900 |
| 80° | 27,600 | 19,900 | 7,700 | 2,000 |
| 85° | 26,900 | 19,600 | 7,300 | 2,150 |
| 90° | 26,000 | 19,200 | 6,800 | 2,300 |
| **95°** | **25,100** | **18,800** | **6,300** | **2,400** |
| 100° | 24,100 | 18,300 | 5,800 | 2,600 |
| 105° | 23,000 | 17,700 | 5,300 | 2,700 |
| 110° | 22,100 | 17,600 | 4,500 | 2,900 |
| 115° | 21,200 | 17,400 | 3,800 | 3,100 |
| **TVA Conditions @ 95° OD DB, 75° ID, 63° ID WB** | | | | |
| **95°** | **24,200** | **18,400** | **5,800** | **2,400** |

**DC6VSS3010A* / DFVE36CP1300A***
**Design Subcooling @ AHRI 95 °F Conditions, 13-15 °F**
**- 100 % Demand**

| Outdoor Temp. °F | Total BTU/h | Sensible BTU/h | Latent BTU/h | Total Watts |
|---|---|---|---|---|
| 75° | 31,800 | 22,900 | 8,900 | 2,280 |
| 80° | 31,000 | 22,800 | 8,200 | 2,415 |
| 85° | 30,200 | 22,700 | 7,500 | 2,550 |
| 90° | 29,300 | 22,300 | 7,000 | 2,695 |
| **95°** | **28,400** | **21,900** | **6,500** | **2,840** |
| 100° | 27,200 | 21,300 | 5,900 | 3,000 |
| 105° | 25,900 | 20,700 | 5,200 | 3,160 |
| 110° | 24,900 | 20,600 | 4,300 | 3,345 |
| 115° | 23,800 | 20,500 | 3,300 | 3,530 |
| **TVA Conditions @ 95° OD DB, 75° ID, 63° ID WB** | | | | |
| **95°** | **27,100** | **21,100** | **6,000** | **2,850** |

**DC6VSS3010A* / DFVE36CP1300A***
**Design Subcooling @ AHRI 95 °F Conditions, 13-15 °F**
**- Boost Mode**

| Outdoor Temp. °F | Total BTU/h | Sensible BTU/h | Latent BTU/h | Total Watts |
|---|---|---|---|---|
| 75° | 34,700 | 24,600 | 10,100 | 2,350 |
| 80° | 33,900 | 24,500 | 9,400 | 2,500 |
| 85° | 33,000 | 24,400 | 8,600 | 2,600 |
| 90° | 31,900 | 23,900 | 8,000 | 2,800 |
| **95°** | **30,700** | **23,300** | **7,400** | **2,900** |
| 100° | 29,500 | 22,800 | 6,700 | 3,100 |
| 105° | 28,200 | 22,300 | 5,900 | 3,250 |
| 110° | 27,100 | 22,100 | 5,000 | 3,400 |
| 115° | 26,000 | 21,800 | 4,200 | 3,600 |
| **TVA Conditions @ 95° OD DB, 75° ID, 63° ID WB** | | | | |
| **95°** | **29,600** | **22,800** | **6,800** | **2,900** |

| DC6VSS3610A* / DFVE36CP1300A* Design Subcooling @ AHRI 95 °F Conditions, 14-16 °F - 100 % Demand | | | | |
|---|---|---|---|---|
| Outdoor Temp. °F | Total BTU/h | Sensible BTU/h | Latent BTU/h | Total Watts |
| 75° | 38,300 | 28,000 | 10,300 | 3,050 |
| 80° | 37,300 | 27,600 | 9,700 | 3,240 |
| 85° | 36,300 | 27,200 | 9,100 | 3,430 |
| 90° | 35,300 | 26,800 | 8,500 | 3,615 |
| **95°** | **34,200** | **26,300** | **7,900** | **3,800** |
| 100° | 32,500 | 25,300 | 7,200 | 4,055 |
| 105° | 30,800 | 24,300 | 6,500 | 4,310 |
| 110° | 29,800 | 24,600 | 5,200 | 4,350 |
| 115° | 28,800 | 24,800 | 4,000 | 4,390 |
| **TVA Conditions @ 95° OD DB, 75° ID, 63° ID WB** | | | | |
| **95°** | **32,500** | **25,400** | **7,100** | **3,850** |

| DC6VSS3610A* / DFVE36CP1300A* Design Subcooling @ AHRI 95 °F Conditions, 14-16 °F - Boost Mode | | | | |
|---|---|---|---|---|
| Outdoor Temp. °F | Total BTU/h | Sensible BTU/h | Latent BTU/h | Total Watts |
| 75° | 41,200 | 30,100 | 11,100 | 3,100 |
| 80° | 40,100 | 29,700 | 10,400 | 3,300 |
| 85° | 39,000 | 29,300 | 9,700 | 3,450 |
| 90° | 37,600 | 28,600 | 9,000 | 3,700 |
| **95°** | **36,200** | **27,900** | **8,300** | **3,900** |
| 100° | 34,700 | 27,000 | 7,700 | 4,100 |
| 105° | 33,100 | 26,100 | 7,000 | 4,350 |
| 110° | 31,000 | 25,500 | 5,500 | 4,400 |
| 115° | 28,800 | 24,800 | 4,000 | 4,400 |
| **TVA Conditions @ 95° OD DB, 75° ID, 63° ID WB** | | | | |
| **95°** | **34,900** | **27,200** | **7,700** | **3,900** |

| DC6VSS4210A* / DFVE48DP1300A* Design Subcooling @ AHRI 95 °F Conditions, 7-9 °F - 100 % Demand | | | | |
|---|---|---|---|---|
| Outdoor Temp. °F | Total BTU/h | Sensible BTU/h | Latent BTU/h | Total Watts |
| 75° | 44,000 | 30,400 | 13,600 | 3,720 |
| 80° | 43,400 | 30,400 | 13,000 | 3,920 |
| 85° | 42,800 | 30,400 | 12,400 | 4,120 |
| 90° | 41,900 | 30,200 | 11,700 | 4,340 |
| **95°** | **41,000** | **29,900** | **11,100** | **4,560** |
| 100° | 39,800 | 29,400 | 10,400 | 4,785 |
| 105° | 38,500 | 28,900 | 9,600 | 5,010 |
| 110° | 35,200 | 27,400 | 7,800 | 4,065 |
| 115° | 31,900 | 25,800 | 6,100 | 3,120 |
| **TVA Conditions @ 95° OD DB, 75° ID, 63° ID WB** | | | | |
| **95°** | **39,400** | **29,200** | **10,200** | **4,550** |

| DC6VSS4210A* / DFVE48DP1300A* Design Subcooling @ AHRI 95 °F Conditions, 7-9 °F - Boost Mode | | | | |
|---|---|---|---|---|
| Outdoor Temp. °F | Total BTU/h | Sensible BTU/h | Latent BTU/h | Total Watts |
| 75° | 47,600 | 31,900 | 15,700 | 3,100 |
| 80° | 47,000 | 31,900 | 15,100 | 3,300 |
| 85° | 46,300 | 31,900 | 14,400 | 3,450 |
| 90° | 45,300 | 31,700 | 13,600 | 3,600 |
| **95°** | **44,200** | **31,400** | **12,800** | **3,800** |
| 100° | 42,900 | 30,900 | 12,000 | 4,000 |
| 105° | 41,600 | 30,400 | 11,200 | 4,150 |
| 110° | 36,800 | 28,100 | 8,700 | 3,700 |
| 115° | 31,900 | 25,800 | 6,100 | 3,150 |
| **TVA Conditions @ 95° OD DB, 75° ID, 63° ID WB** | | | | |
| **95°** | **42,600** | **30,700** | **11,900** | **3,800** |

| DC6VSS4810A* / DFVE48DP1300A* Design Subcooling @ AHRI 95 °F Conditions, 8-10 °F - 100 % Demand | | | | |
|---|---|---|---|---|
| Outdoor Temp. °F | Total BTU/h | Sensible BTU/h | Latent BTU/h | Total Watts |
| 75° | 50,700 | 34,500 | 16,200 | 4,130 |
| 80° | 49,600 | 34,500 | 15,100 | 4,340 |
| 85° | 48,400 | 34,400 | 14,000 | 4,550 |
| 90° | 47,000 | 33,800 | 13,200 | 4,775 |
| **95°** | **45,500** | **33,200** | **12,300** | **5,000** |
| 100° | 43,700 | 32,500 | 11,200 | 5,225 |
| 105° | 41,800 | 31,800 | 10,000 | 5,450 |
| 110° | 37,000 | 28,900 | 8,100 | 4,395 |
| 115° | 32,100 | 26,000 | 6,100 | 3,340 |
| **TVA Conditions @ 95° OD DB, 75° ID, 63° ID WB** | | | | |
| **95°** | **43,700** | **32,300** | **11,400** | **4,990** |

| DC6VSS4810A* / DFVE48DP1300A* Design Subcooling @ AHRI 95 °F Conditions, 8-10 °F - Boost Mode | | | | |
|---|---|---|---|---|
| Outdoor Temp. °F | Total BTU/h | Sensible BTU/h | Latent BTU/h | Total Watts |
| 75° | 56,000 | 35,800 | 20,200 | 4,100 |
| 80° | 54,800 | 35,600 | 19,200 | 4,300 |
| 85° | 53,500 | 35,300 | 18,200 | 4,500 |
| 90° | 51,800 | 35,000 | 16,800 | 4,700 |
| **95°** | **50,100** | **34,600** | **15,500** | **4,950** |
| 100° | 48,200 | 33,800 | 14,400 | 5,200 |
| 105° | 46,300 | 32,900 | 13,400 | 5,400 |
| 110° | 39,200 | 29,500 | 9,700 | 4,400 |
| 115° | 32,100 | 26,000 | 6,100 | 3,350 |
| **TVA Conditions @ 95° OD DB, 75° ID, 63° ID WB** | | | | |
| **95°** | **48,300** | **33,300** | **15,000** | **4,950** |

| DC6VSS6010A* / DFVE60DP1300A* Design Subcooling @ AHRI 95 °F Conditions, 8-10 °F - 100 % Demand | | | | |
|---|---|---|---|---|
| Outdoor Temp. °F | Total BTU/h | Sensible BTU/h | Latent BTU/h | Total Watts |
| 75° | 59,000 | 40,100 | 18,900 | 4,710 |
| 80° | 57,800 | 39,900 | 17,900 | 5,020 |
| 85° | 56,500 | 39,600 | 16,900 | 5,330 |
| 90° | 55,000 | 39,100 | 15,900 | 5,635 |
| **95°** | **53,500** | **38,500** | **15,000** | **5,940** |
| 100° | 49,500 | 36,300 | 13,200 | 5,915 |
| 105° | 45,400 | 34,100 | 11,300 | 5,890 |
| 110° | 40,700 | 31,800 | 8,900 | 5,500 |
| 115° | 35,900 | 29,400 | 6,500 | 5,110 |
| **TVA Conditions @ 95° OD DB, 75° ID, 63° ID WB** | | | | |
| **95°** | **51,200** | **37,400** | **13,800** | **6,000** |

| DC6VSS6010A* / DFVE60DP1300A* Design Subcooling @ AHRI 95 °F Conditions, 8-10 °F - Boost Mode | | | | |
|---|---|---|---|---|
| Outdoor Temp. °F | Total BTU/h | Sensible BTU/h | Latent BTU/h | Total Watts |
| 75° | 62,400 | 40,600 | 21,800 | 5,950 |
| 80° | 62,100 | 41,000 | 21,100 | 6,350 |
| 85° | 61,500 | 41,200 | 20,300 | 6,700 |
| 90° | 59,900 | 41,000 | 18,900 | 6,950 |
| **95°** | **57,500** | **40,300** | **17,200** | **7,300** |
| 100° | 51,500 | 37,200 | 14,300 | 6,550 |
| 105° | 45,400 | 34,000 | 11,400 | 5,900 |
| 110° | 40,700 | 31,800 | 8,900 | 5,550 |
| 115° | 35,900 | 29,500 | 6,400 | 5,150 |
| **TVA Conditions @ 95° OD DB, 75° ID, 63° ID WB** | | | | |
| **95°** | **55,400** | **39,300** | **16,100** | **7,300** |

| DC6VSA181WA* / DFVE24BP1300A* Design Subcooling @ AHRI 95 °F Conditions, 9-11 °F - 100 % Demand | | | | |
|---|---|---|---|---|
| Outdoor Temp. °F | Total BTU/h | Sensible BTU/h | Latent BTU/h | Total Watts |
| 75° | 19,000 | 13,500 | 5,500 | 1,080 |
| 80° | 18,600 | 13,400 | 5,200 | 1,165 |
| 85° | 18,100 | 13,200 | 4,900 | 1,250 |
| 90° | 17,600 | 13,000 | 4,600 | 1,340 |
| **95°** | **17,100** | **12,800** | **4,300** | **1,430** |
| 100° | 16,400 | 12,500 | 3,900 | 1,540 |
| 105° | 15,700 | 12,100 | 3,600 | 1,650 |
| 110° | 15,100 | 12,000 | 3,100 | 1,775 |
| 115° | 14,500 | 11,900 | 2,600 | 1,900 |
| **TVA Conditions @ 95° OD DB, 75° ID, 63° ID WB** | | | | |
| **95°** | **16,400** | **12,500** | **3,900** | **1,430** |

| DC6VSA181WA* / DFVE24BP1300A* Design Subcooling @ AHRI 95 °F Conditions, 9-11 °F - Boost Mode | | | | |
|---|---|---|---|---|
| Outdoor Temp. °F | Total BTU/h | Sensible BTU/h | Latent BTU/h | Total Watts |
| 75° | 20,500 | 14,800 | 5,700 | 1,100 |
| 80° | 20,000 | 14,600 | 5,400 | 1,200 |
| 85° | 19,500 | 14,400 | 5,100 | 1,300 |
| 90° | 18,900 | 14,200 | 4,700 | 1,400 |
| **95°** | **18,300** | **13,900** | **4,400** | **1,450** |
| 100° | 17,600 | 13,600 | 4,000 | 1,600 |
| 105° | 16,900 | 13,200 | 3,700 | 1,700 |
| 110° | 16,300 | 13,100 | 3,200 | 1,800 |
| 115° | 15,700 | 13,000 | 2,700 | 1,950 |
| **TVA Conditions @ 95° OD DB, 75° ID, 63° ID WB** | | | | |
| **95°** | **17,600** | **13,600** | **4,000** | **1,450** |

| DC6VSA241WA* / DFVE24BP1300A* Design Subcooling @ AHRI 95 °F Conditions, 11-13 °F - 100 % Demand | | | | |
|---|---|---|---|---|
| Outdoor Temp. °F | Total BTU/h | Sensible BTU/h | Latent BTU/h | Total Watts |
| 75° | 26,000 | 18,200 | 7,800 | 1,790 |
| 80° | 25,400 | 18,000 | 7,400 | 1,910 |
| 85° | 24,700 | 17,800 | 6,900 | 2,030 |
| 90° | 24,000 | 17,500 | 6,500 | 2,150 |
| **95°** | **23,200** | **17,200** | **6,000** | **2,270** |
| 100° | 22,200 | 16,600 | 5,600 | 2,420 |
| 105° | 21,100 | 16,000 | 5,100 | 2,570 |
| 110° | 20,300 | 15,900 | 4,400 | 2,740 |
| 115° | 19,400 | 15,700 | 3,700 | 2,910 |
| **TVA Conditions @ 95° OD DB, 75° ID, 63° ID WB** | | | | |
| **95°** | **22,200** | **16,700** | **5,500** | **2,290** |

| DC6VSA241WA* / DFVE24BP1300A* Design Subcooling @ AHRI 95 °F Conditions, 11-13 °F - Boost Mode | | | | |
|---|---|---|---|---|
| Outdoor Temp. °F | Total BTU/h | Sensible BTU/h | Latent BTU/h | Total Watts |
| 75° | 28,300 | 20,100 | 8,200 | 1,900 |
| 80° | 27,600 | 19,900 | 7,700 | 2,000 |
| 85° | 26,900 | 19,600 | 7,300 | 2,150 |
| 90° | 26,000 | 19,200 | 6,800 | 2,300 |
| **95°** | **25,100** | **18,800** | **6,300** | **2,400** |
| 100° | 24,100 | 18,300 | 5,800 | 2,600 |
| 105° | 23,000 | 17,700 | 5,300 | 2,700 |
| 110° | 22,100 | 17,600 | 4,500 | 2,900 |
| 115° | 21,200 | 17,400 | 3,800 | 3,100 |
| **TVA Conditions @ 95° OD DB, 75° ID, 63° ID WB** | | | | |
| **95°** | **24,200** | **18,400** | **5,800** | **2,400** |

| DC6VSA301WA* / DFVE36CP1300A* Design Subcooling @ AHRI 95 °F Conditions, 13-15 °F - 100 % Demand | | | | |
|---|---|---|---|---|
| **Outdoor Temp. °F** | **Total BTU/h** | **Sensible BTU/h** | **Latent BTU/h** | **Total Watts** |
| 75° | 31,800 | 22,900 | 8,900 | 2,280 |
| 80° | 31,000 | 22,800 | 8,200 | 2,415 |
| 85° | 30,200 | 22,700 | 7,500 | 2,550 |
| 90° | 29,300 | 22,300 | 7,000 | 2,695 |
| **95°** | **28,400** | **21,900** | **6,500** | **2,840** |
| 100° | 27,200 | 21,300 | 5,900 | 3,000 |
| 105° | 25,900 | 20,700 | 5,200 | 3,160 |
| 110° | 24,900 | 20,600 | 4,300 | 3,345 |
| 115° | 23,800 | 20,500 | 3,300 | 3,530 |
| **TVA Conditions @ 95° OD DB, 75° ID, 63° ID WB** | | | | |
| **95°** | **27,100** | **21,100** | **6,000** | **2,850** |

| DJC6VSA301WA* / DFVE36CP1300A* Design Subcooling @ AHRI 95 °F Conditions, 13-15 °F - Boost Mode | | | | |
|---|---|---|---|---|
| **Outdoor Temp. °F** | **Total BTU/h** | **Sensible BTU/h** | **Latent BTU/h** | **Total Watts** |
| 75° | 34,700 | 24,600 | 10,100 | 2,350 |
| 80° | 33,900 | 24,500 | 9,400 | 2,500 |
| 85° | 33,000 | 24,400 | 8,600 | 2,600 |
| 90° | 31,900 | 23,900 | 8,000 | 2,800 |
| **95°** | **30,700** | **23,300** | **7,400** | **2,900** |
| 100° | 29,500 | 22,800 | 6,700 | 3,100 |
| 105° | 28,200 | 22,300 | 5,900 | 3,250 |
| 110° | 27,100 | 22,100 | 5,000 | 3,400 |
| 115° | 26,000 | 21,800 | 4,200 | 3,600 |
| **TVA Conditions @ 95° OD DB, 75° ID, 63° ID WB** | | | | |
| **95°** | **29,600** | **22,800** | **6,800** | **2,900** |

| DC6VSA361WA* / CAPEA3626*3A* + MBVK16CP1***A* Design Subcooling @ AHRI 95 °F Conditions, 12-14 °F - 100 % Demand | | | | |
|---|---|---|---|---|
| **Outdoor Temp. °F** | **Total BTU/h** | **Sensible BTU/h** | **Latent BTU/h** | **Total Watts** |
| 75° | 36,700 | 27,200 | 9,500 | 2,650 |
| 80° | 35,900 | 27,100 | 8,800 | 2,830 |
| 85° | 35,000 | 27,000 | 8,000 | 3,010 |
| 90° | 34,000 | 26,600 | 7,400 | 3,190 |
| **95°** | **33,000** | **26,100** | **6,900** | **3,370** |
| 100° | 31,600 | 25,300 | 6,300 | 3,600 |
| 105° | 30,200 | 24,500 | 5,700 | 3,830 |
| 110° | 29,100 | 24,300 | 4,800 | 4,090 |
| 115° | 28,800 | 24,800 | 4,000 | 4,400 |
| **TVA Conditions @ 95° OD DB, 75° ID, 63° ID WB** | | | | |
| **95°** | **31,600** | **25,300** | **6,300** | **3,400** |

| DC6VSA361WA* / CAPEA3626*3A* + MBVK16CP1***A* Design Subcooling @ AHRI 95 °F Conditions, 12-14 °F - Boost Mode | | | | |
|---|---|---|---|---|
| **Outdoor Temp. °F** | **Total BTU/h** | **Sensible BTU/h** | **Latent BTU/h** | **Total Watts** |
| 75° | 41,200 | 30,100 | 11,100 | 3,100 |
| 80° | 40,100 | 29,700 | 10,400 | 3,300 |
| 85° | 39,000 | 29,300 | 9,700 | 3,450 |
| 90° | 37,600 | 28,600 | 9,000 | 3,700 |
| **95°** | **36,200** | **27,900** | **8,300** | **3,900** |
| 100° | 34,700 | 27,000 | 7,700 | 4,100 |
| 105° | 33,100 | 26,100 | 7,000 | 4,350 |
| 110° | 31,000 | 25,500 | 5,500 | 4,400 |
| 115° | 28,800 | 24,800 | 4,000 | 4,400 |
| **TVA Conditions @ 95° OD DB, 75° ID, 63° ID WB** | | | | |
| **95°** | **34,900** | **27,200** | **7,700** | **3,900** |

| Normal mode | | Sound Power Level[1] | | | | | | |
|---|---|---|---|---|---|---|---|---|
| Tonnage | Total Unit Sound Rating (dBA) | Octave Band Spectrum Frequency (Hz) Analysis (dB) | | | | | | |
| | | 125 | 250 | 500 | 1000 | 2000 | 4000 | 8000 |
| 1.5-ton | 61 | 48.1 | 53.4 | 57.3 | 55.2 | 48.8 | 41.6 | 36.9 |
| 2-ton | 64 | 48.2 | 58.2 | 61.0 | 56.1 | 49.2 | 43.7 | 39.4 |
| 2.5-ton | 67 | 57.9 | 58.4 | 62.9 | 61.1 | 55.1 | 48.3 | 41.2 |
| 3-ton | 68 | 56.3 | 60.0 | 64.3 | 61.3 | 56.9 | 53.7 | 45.8 |
| 3.5-ton | 71 | 60.3 | 64.5 | 65.2 | 65.8 | 60.9 | 54.4 | 48.1 |
| 4-ton | 72 | 64.0 | 65.4 | 66.2 | 65.8 | 61.0 | 56.3 | 49.3 |
| 5-ton | 73 | 62.9 | 66.4 | 67.0 | 67.4 | 63.0 | 58.9 | 50.6 |

[1]Compliant with AHRI 270.
[2]Compliant with AHRI 220.

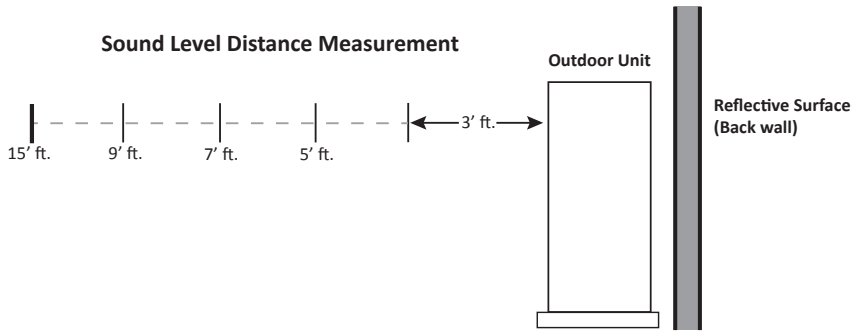


| | | Sound Pressure (dBA) Cooling Mode[1] | | | | |
|---|---|---|---|---|---|---|
| | | Distance From Property Line | | | | |
| **Tonnage** | **Reflective Surface Qty.** | **3'** | **5'** | **7'** | **9'** | **15'** |
| 1.5-ton | 0 | 54 | 49 | 46 | 44 | 40 |
| | 1 | 57 | 52 | 49 | 47 | 43 |
| | 2 | 60 | 55 | 52 | 50 | 46 |
| 2-ton | 0 | 57 | 52 | 49 | 47 | 43 |
| | 1 | 60 | 55 | 52 | 50 | 46 |
| | 2 | 63 | 58 | 55 | 53 | 49 |
| 2.5-ton | 0 | 60 | 55 | 52 | 50 | 46 |
| | 1 | 63 | 58 | 55 | 53 | 49 |
| | 2 | 66 | 61 | 58 | 56 | 52 |
| 3-ton | 0 | 61 | 56 | 53 | 51 | 47 |
| | 1 | 64 | 59 | 56 | 54 | 50 |
| | 2 | 67 | 62 | 59 | 57 | 53 |
| 3.5-ton | 0 | 64 | 59 | 56 | 54 | 50 |
| | 1 | 67 | 62 | 59 | 57 | 53 |
| | 2 | 70 | 65 | 62 | 60 | 56 |
| 4-ton | 0 | 65 | 60 | 57 | 55 | 51 |
| | 1 | 68 | 63 | 60 | 58 | 54 |
| | 2 | 71 | 66 | 63 | 61 | 57 |
| 5-ton | 0 | 66 | 61 | 58 | 56 | 52 |
| | 1 | 69 | 64 | 61 | 59 | 55 |
| | 2 | 72 | 67 | 64 | 62 | 58 |

[1] Compliant with AHRI 275 utilizing standard mode, total sound levels

**Quiet mode**

| Tonnage | Sound suppression level | Sound Power Level (dBA)[1] | Sound Pressure Level (dBA)[2] | Capacity Decrease |
|---|---|---|---|---|
| 1.5-ton | LV.1 | 63 | 46 | ~5% |
| | LV.2 | 60 | 43 | ~20% |
| | LV.3 | 57 | 40 | ~40% |
| 2-ton | LV.1 | 64 | 47 | ~5% |
| | LV.2 | 61 | 44 | ~35% |
| | LV.3 | 58 | 41 | ~45% |
| 2.5-ton | LV.1 | 65 | 51 | ~5% |
| | LV.2 | 62 | 48 | ~30% |
| | LV.3 | 59 | 45 | ~45% |
| 3-ton | LV.1 | 65 | 51 | ~5% |
| | LV.2 | 62 | 48 | ~35% |
| | LV.3 | 59 | 45 | ~50% |
| 3.5-ton | LV.1 | 67 | 55 | ~5% |
| | LV.2 | 62 | 50 | ~45% |
| | LV.3 | 57 | 45 | ~50% |
| 4-ton | LV.1 | 67 | 55 | ~5% |
| | LV.2 | 62 | 50 | ~25% |
| | LV.3 | 57 | 45 | ~45% |
| 5-ton | LV.1 | 68 | 55 | ~5% |
| | LV.2 | 63 | 50 | ~45% |
| | LV.3 | 58 | 45 | ~50% |

[1] Quiet Mode Sound Power and Sound Pressure levels determined at a distance of 3 [ft].

**All AHRI system ratings are accessible in the Unitary Matchup Tool via Daikin City or in the Daikin System Configurator tool via PartnerLink.**

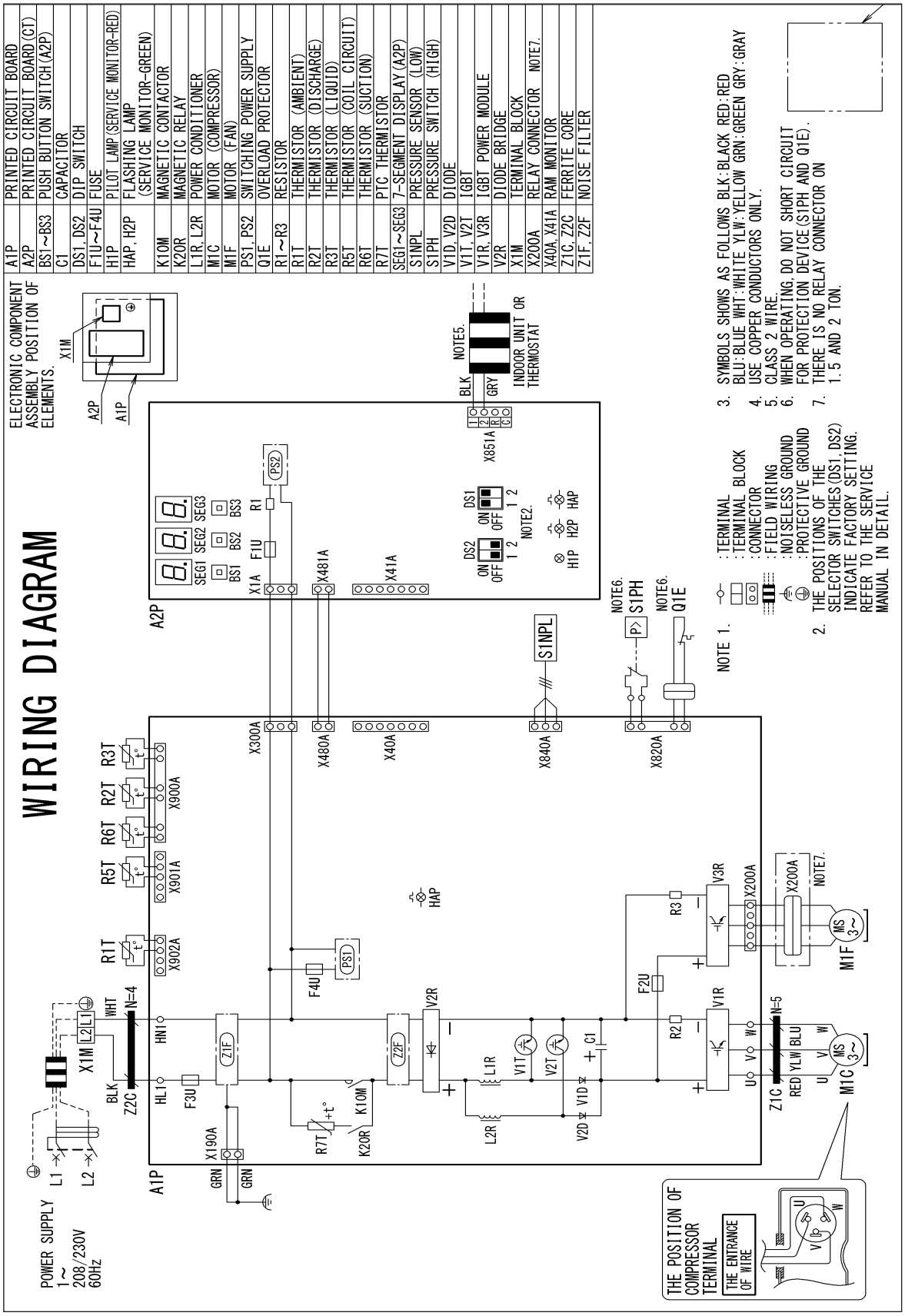


**WARNING**

***High Voltage:*** Disconnect all power before servicing or installing this unit. Multiple power sources may be present. Failure to do so may cause property damage, personal injury, or death.

Wiring is subject to change. Always refer to the wiring diagram on the unit for the most up-to-date wiring.

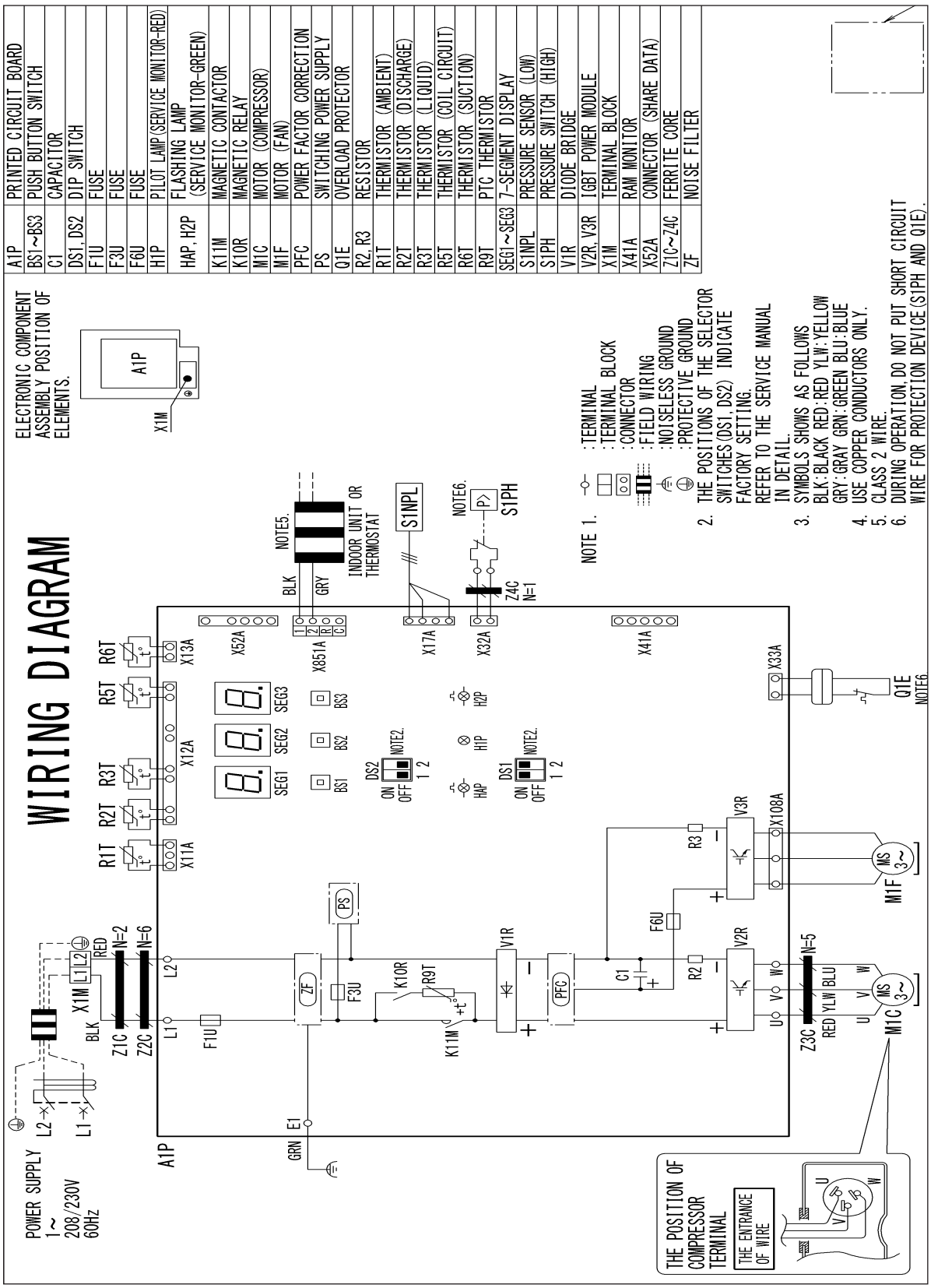


**WARNING**

***High Voltage:*** Disconnect all power before servicing or installing this unit. Multiple power sources may be present. Failure to do so may cause property damage, personal injury, or death.

Wiring is subject to change. Always refer to the wiring diagram on the unit for the most up-to-date wiring.

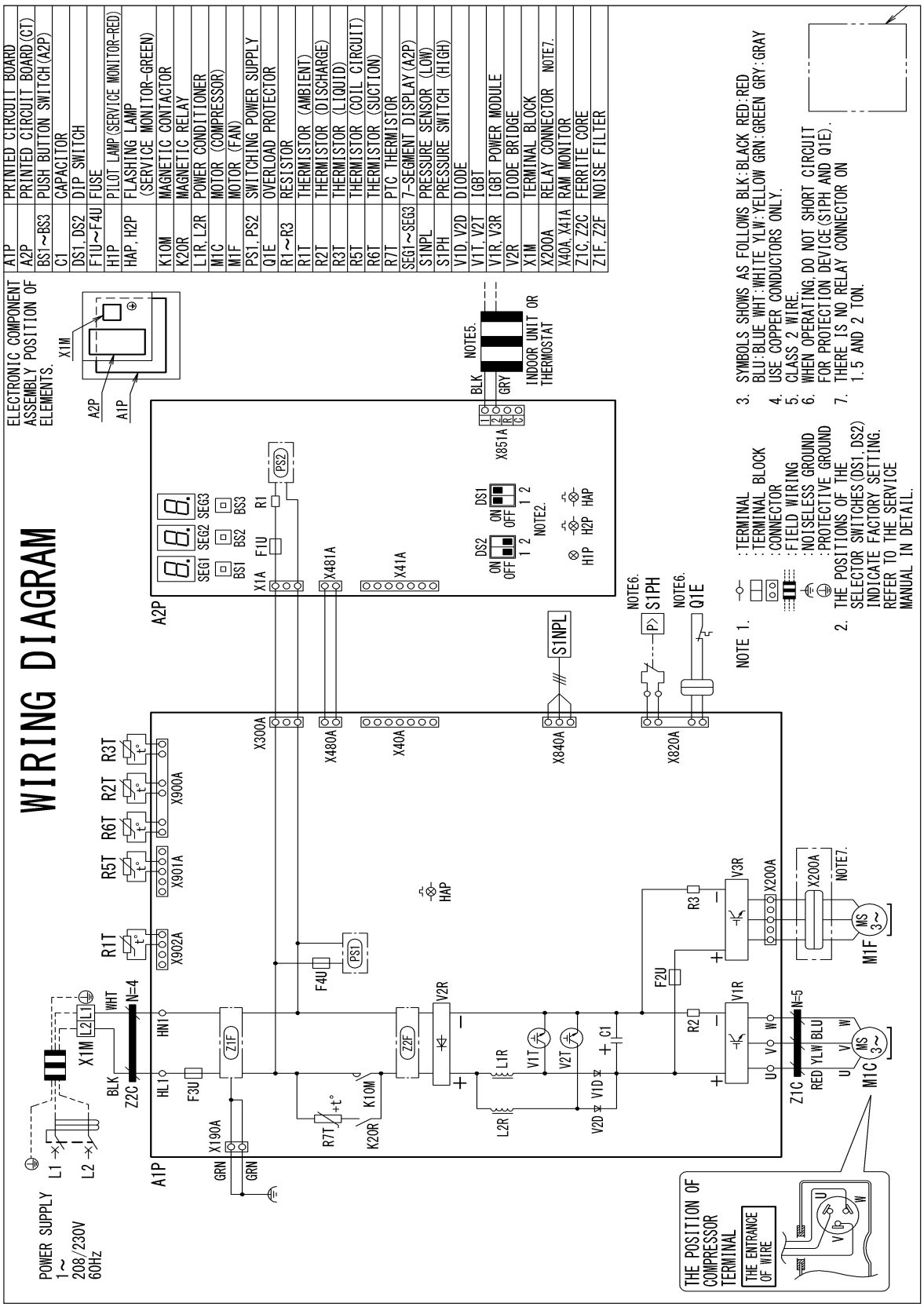


**WARNING**

***High Voltage:*** Disconnect all power before servicing or installing this unit. Multiple power sources may be present. Failure to do so may cause property damage, personal injury, or death.

Wiring is subject to change. Always refer to the wiring diagram on the unit for the most up-to-date wiring.

| MODEL | DIMENSIONS | | |
|---|---|---|---|
| | W" | D" | H" |
| DC6VSS1810A*/ DC6VSA181WA | 36⅝ | 13¾ | 27⅜ |
| DC6VSS2410A*/ DC6VSA241WA* | 36⅝ | 13¾ | 27⅜ |
| DC6VSS3010A*/ DC6VSA301WA* | 36⅝ | 13¾ | 27⅜ |
| DC6VSS3610A*/ DC6VSA361WA* | 36⅝ | 13¾ | 27⅜ |

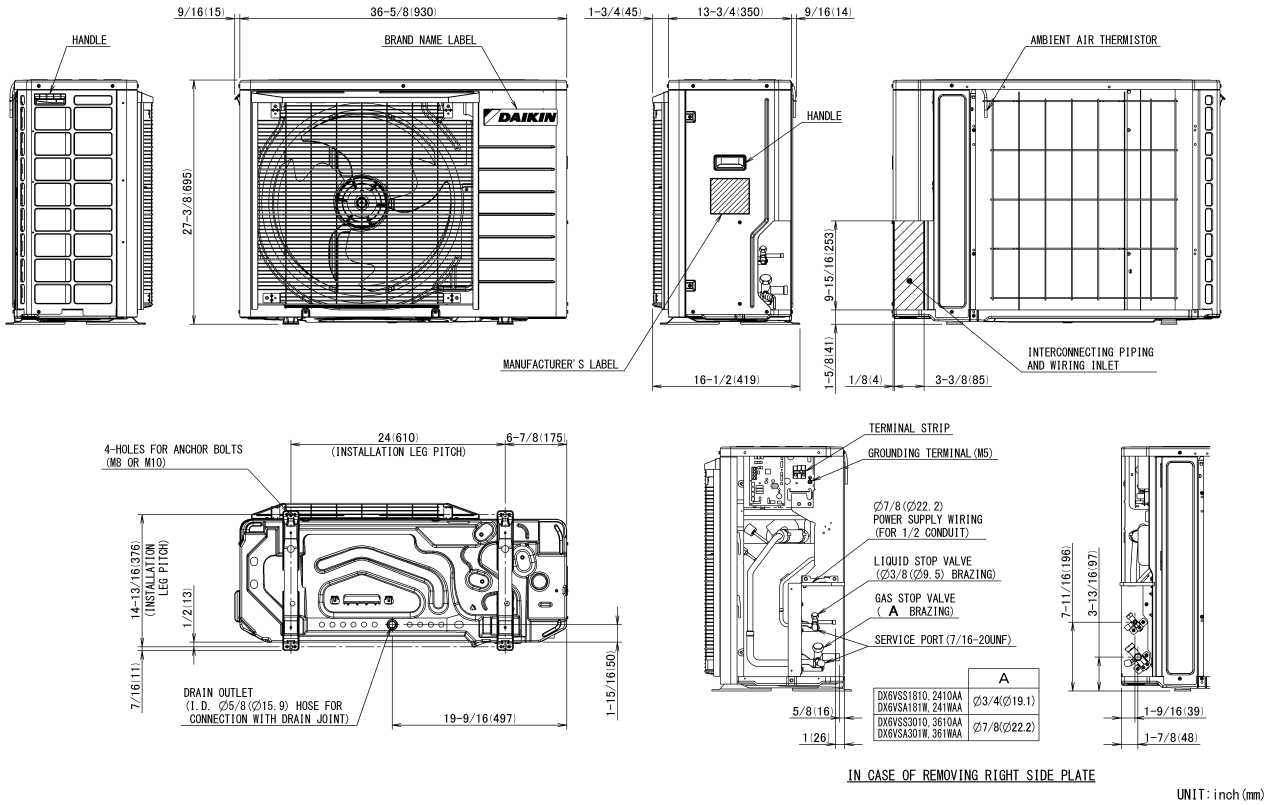

| MODEL | DIMENSIONS | | |
|---|---|---|---|
| | W" | D" | H" |
| DC6VSS4210A* | 37 | 12⅝ | 39 |
| DC6VSS4810A* | 37 | 12⅝ | 39 |
| DC6VSS6010A* | 37 | 12⅝ | 39 |

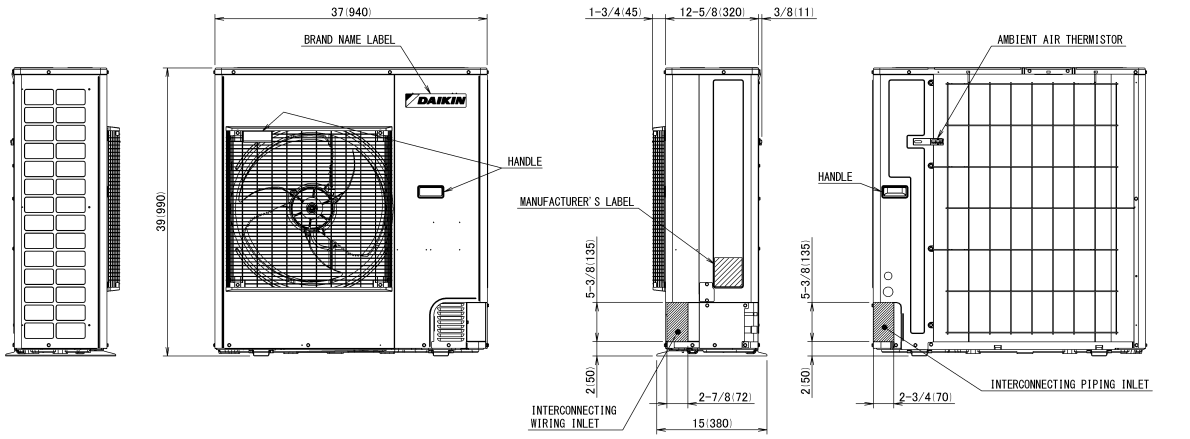


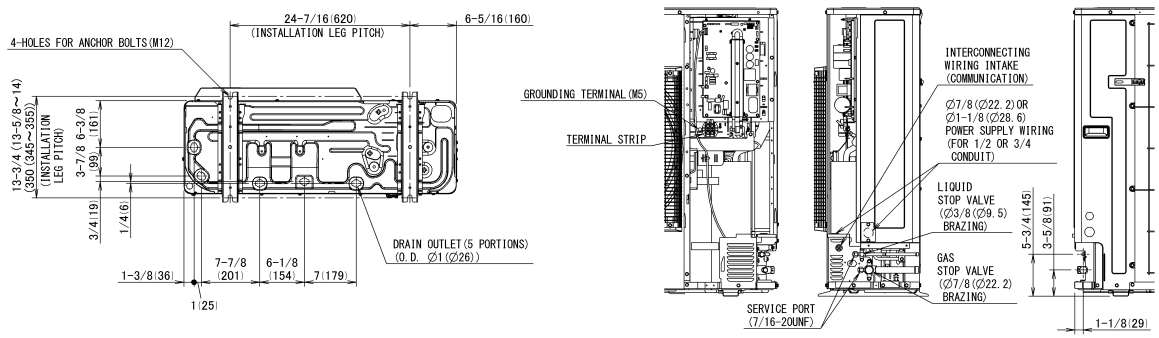

| Model | Description | DC6VSS 1810A* | DC6VSS 2410A* | DC6VSS 3010A* | DC6VSS 3610A* | DC6VSS 4210A* | DC6VSS 4810A* | DC6VSS 6010A* | DC6VSA 181WA* | DC6VSA 241WA* | DC6VSA 301WA* | DC6VSA 361WA* |
|---|---|---|---|---|---|---|---|---|---|---|---|---|
| KPW5G112 | Wind Baffle | X | X | X | X | X | X | X | X | X | X | X |
| 130-DK-006 | Hail Guard | X | X | X | X | | | | X | X | X | X |
| 130-DK-008 | Hail Guard | | | | | X | X | X | | | | |
| DSEN-HAQA | Daikin One Home Air Monitor | X | X | X | X | X | X | X | X | X | X | X |
| DACA-WB-3 | Powder Coated Wall-Mounted Bracket | X | X | X | X | X | X | X | X | X | X | X |
| DTA119A72 | D24V Gateway | X | X | X | X | X | X | X | | | | |

Our continuing commitment to quality products may mean a change in specifications without notice.
**©2025 DAIKIN COMFORT TECHNOLGIES MANUFACTURING, L.P.** • Houston, Texas • Printed in the USA.